INSPECO X1

USER MANUAL

Ultrasound / Infrared / Optical Inspection Methods

Integrated Industrial Facility Safety Diagnosis System

INSPECO

Version 1.0

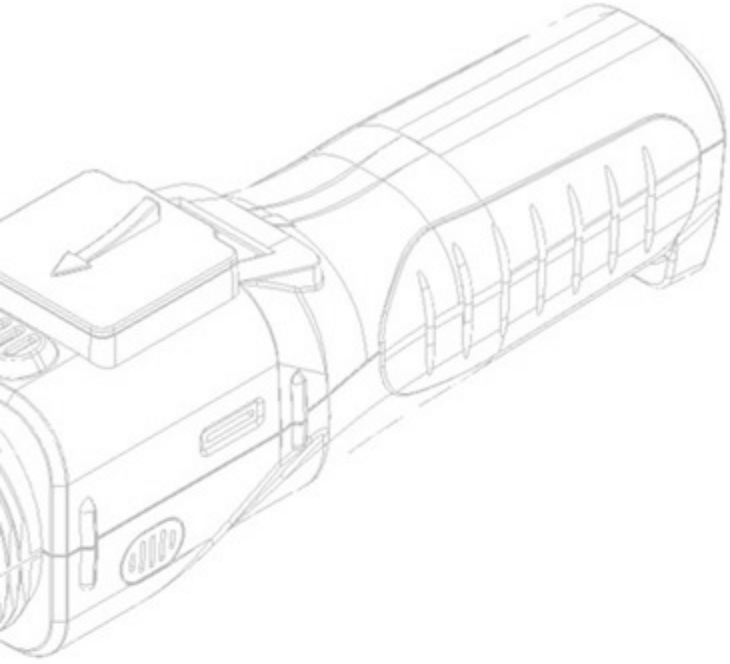

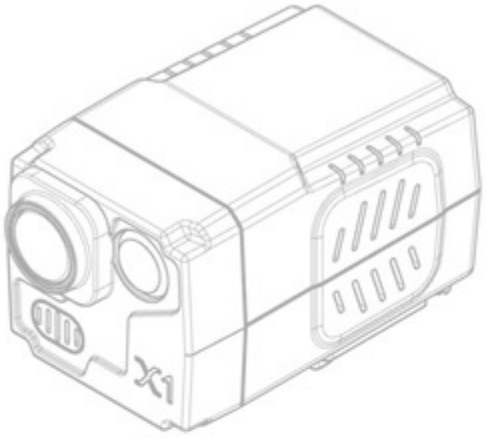

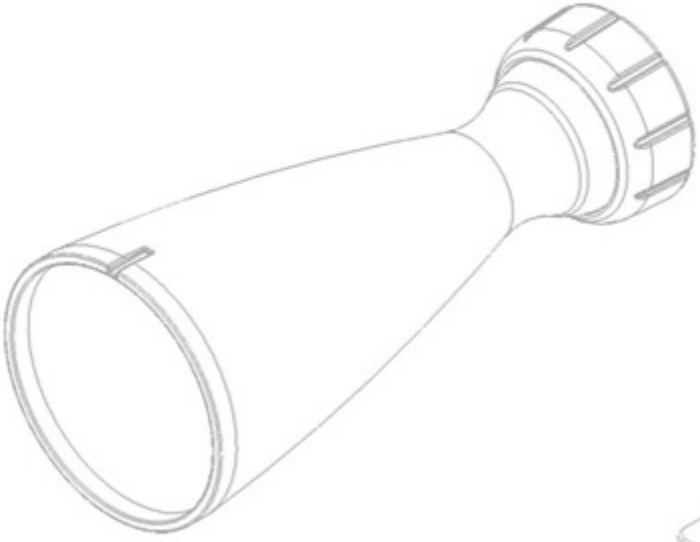

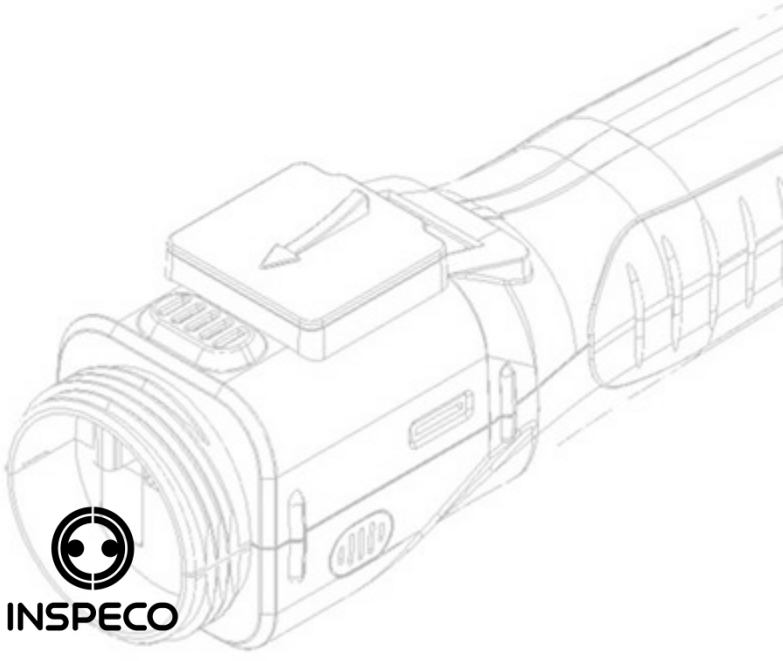

INSPECO

Version 1.0

Table of Contents

CHAPTER 1 INTRODUCING INSPECO X1 (Getting to Know Your Device)

1. Notes (Read Me First)
2. Introducing INSPECO X1 Inspection Device
3. Device Specifications
4. Device Composition
5. Device Structure
6. Assembling the Device
7. Using the Device

CHAPTER 2 INSPECO X1 FUNCTIONS

1. Main Screen (On-Screen Display)
2. Menu Settings
3. Main Screen Settings
4. Sound Storage
5. Device Settings

CHAPTER 3 MOBILE APPLICATION PROGRAMS

1. Connecting Your Device to a Tablet PC
2. Application Main Screen
3. Integrated Diagnosis Mode
4. Camera (Ultrasound) Mode
5. Thermal Imaging Camera (Infrared) Mode
6. Status Diagnosis
7. Creating a Report
8. Settings
9. Data Sharing
10. Warning Message

Table of Contents

CHAPTER 4 PRODUCT INFORMATION

1. ERROR Messages
2. Important Safety Instructions
   - 2.1 Device
   - 2.2 Power Supply
   - 2.3 Environment
3. Copyright
4. Troubleshooting
5. Customer Service & Warranty

CHAPTER 1

INTRODUCING INSPECO X1 (Getting to Know Your Device)

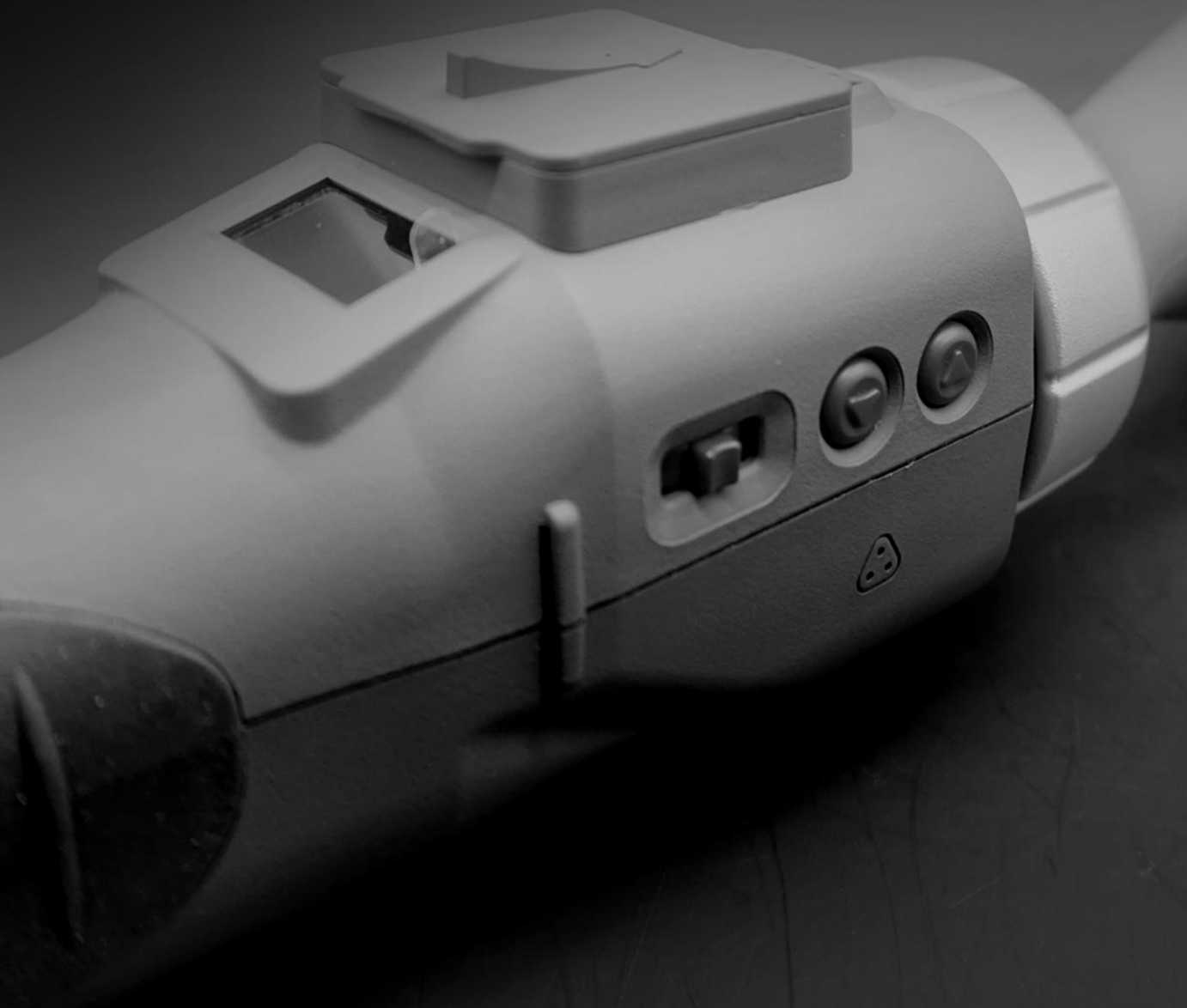

CHAPTER 1

Introduction

1. Notes (Read Me First)
2. Introducing INSPECO X1
3. Device Specifications
4. Device Components
5. Device Structure
6. Assembling the Device
7. Using the Device

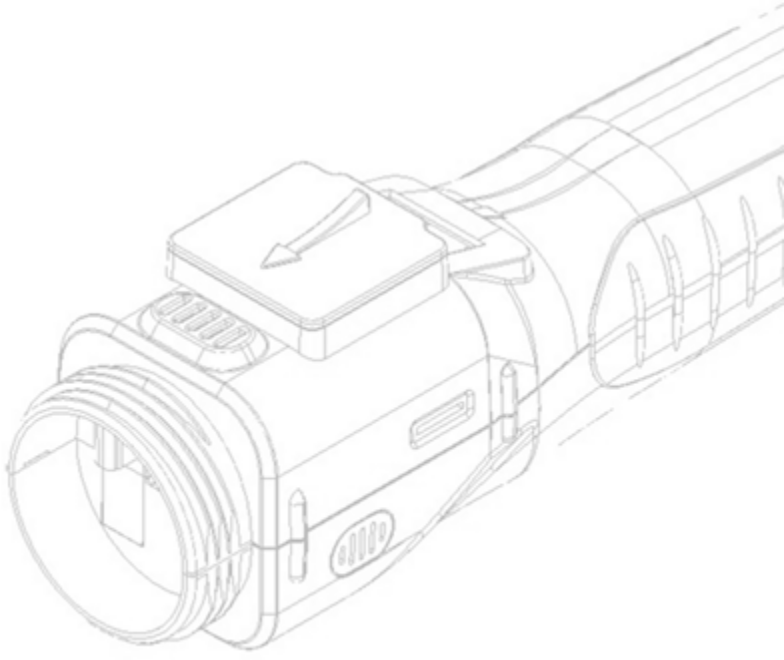

CHAPTER 1

1. Notes (Read Me First)

1) To prevent damage to your device or injury to yourself or to others, read the Important Safety Instructions (Chapter 4) in their entirety before using this device.

2) The actual device may differ from the images used in this manual.

3) Some of the contents of this manual may differ from your device depending on the software of the device or the manufacturer. INSPECO reserves the right to change the specifications of the hardware and software described in this manual at any time without prior notice.

4) Certain features of the device, including but not limited to software and accessories, are subject to change depending on the country, specifications, or manufacturer.

5) No parts of the manual included with the device may be reproduced, transmitted, transcribed, stored in a retrieval system, or translated into any language in any form, by any means, without INSPECO's prior written consent. All contents and images included in this manual were created for the purpose of this manual. Copyright to all contents included in this manual is the property of INSPECO. INSPECO will not be held liable for any damages resulting from copyright infringements. Violators shall be held liable.

6) Read all the safety precautions in their entirety and heed all warnings provided in this manual to prevent damage or injury. INSPECO will not be held liable for any damages resulting from the misuse of this device.

7) While every effort has been made to ensure that the information in this manual is accurate and complete, INSPECO will not be held liable for printing or clerical errors.

8) For more details not specified in this manual, please contact the manufacturer directly.

CHAPTER 1

2. Introducing INSPECO X1

Rigorous safety management through failure prediction and predictive maintenance is key to maintaining a safe environment in industrial facilities. With the advent of entirely new capabilities, such as automation and AI, advancements in facility safety management have become more important that ever.

INSPECO X1 aims to break new ground and overcome the limitations of existing inspection methods. INSPECO X1's All-in-One diagnosis system integrates ultrasound, infrared, and optical inspection methods and comes equipped with the world's first integrated analysis algorithm software.

INSPECO X1's All-in-One diagnosis system allows the user to accurately identify various sources of defects with only a single inspection, providing systematic diagnostic solutions and safety management data for a variety of industrial settings.

- INSPECO X1's diagnosis algorithm incorporates ultrasound, infrared, and optical inspection techniques that are optimal for facility failure detection and provides safety diagnosis solutions right on the spot.

- By integrating ultrasound, infrared, and optical inspection methods into a single device, INSPECO X1 aims to dramatically increase efficiency. Efficiency is maximized by reducing time, cost, and labor.

- INSPECO X1 is an improvement on existing inspection methods in terms of accuracy and detection rate. INSPECO X1 allows the user to detect failures that cannot be detected by individual inspection methods.

- INSPECO X1 is a culmination of years of field experience and research. Be sure to increase efficiency and ensure accuracy with your INSPECO X1.

CHAPTER 1

3. INSPECO X1 Specifications

Ultrasound Detector	
Sensor	Open Type Ultrasound Sensor
Range	0 ~ 140 dB
Bandwidth	20 kHz ~ 150 kHz
Resolution	1dB
Margin of Error	± 0.25dB
Transducer	
Sensor Sensitivity	-85 ~ 60 dB
Frequency Range	35 kHz ~ 45 kHz
Hardware	
Material	PC, ABS, SILICON
Storage Device	Micro SD Card Type
	Up to 32 GB of Storage Space
	Wav File (Up to 180 Seconds)
Screen	OLED Display
Operating Device	Tactile Switch, Jog Switch
Input/Output Port	DC 8.4V AC Adaptor
	3.5 R Audio Jack
Camera	
Resolution	1920 X 1080 @ 30fps
Lens	8mm (Subject to Change)
Pixel	2.0MP
Aperture	F1.8

9

CHAPTER 1

Infrared Camera	
Resolution	256 X 192
Frequency	25Hz
Module NETD (Heat Sensitivity)	≤60mk@f#1.0
Operating Temperature	-20°C～+60°C
Measurement Rage	-20°C~+120°C (extended range: 120°C ~ 600°C)
Margin of Error	±2°C/±2% of range (extended range: /±3%)
Temperature Correction	Manual / Automatic
Operating Environment	
Operating Temperature	-20 ~ +70 °C
Storage Temperature	-25 ~ +80 °C
Dimensions/Weight	
Size	80x126x368.5mm, 80x80x368.5mm (without camera)
Weight	550g, 440g (without camera)
Power Source	
Battery Type	Lithium-Ion
AC Adapter	Available
Operating Time	11 hours (without infrared camera)
	7 hours (with infrared camera)

* Specifications are subject to change without notice to enhance performance or quality.

CHAPTER 1

4. Components

4.1) The actual device may differ from the images shown. Certain features are subject to change without prior notice. Components/accessories originally included with the device will not be provided in the event of a loss or damage and can be purchased separately.

Main Body	Infrared Camera Module	Detector E030	Detector E015
Probe	Link Cover	Micro SD Card	Kernel-type Earphone
Hand Strap	Car Adapter	AC Adapter	USB C-Type Cable
Hard Case	Tablet PC	Tablet Case	Manual Book

5. Structure

1) Main Body

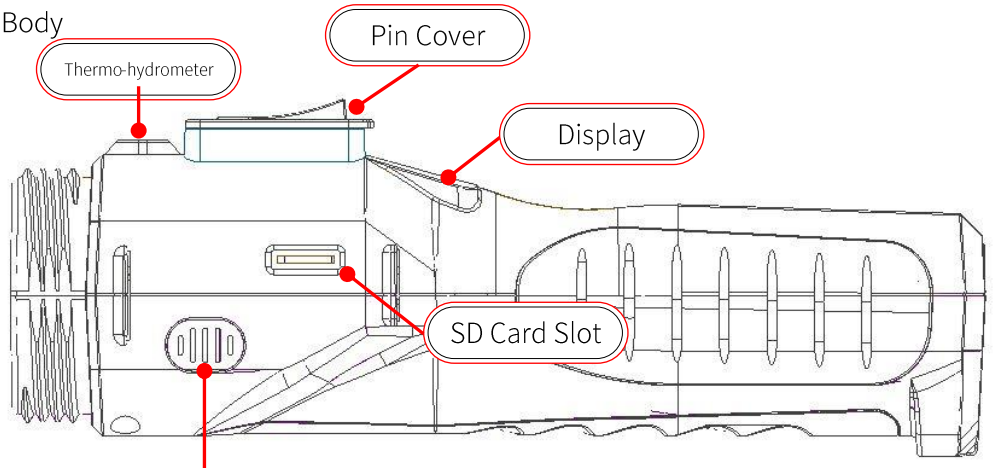

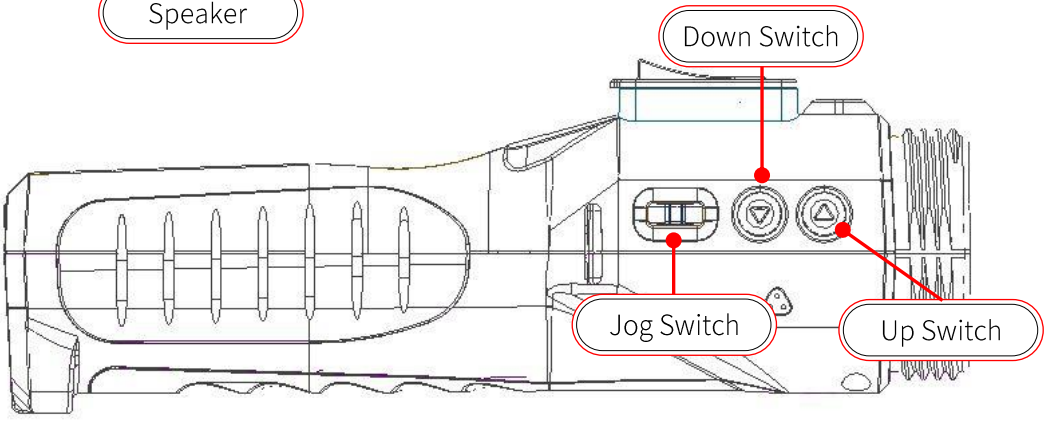

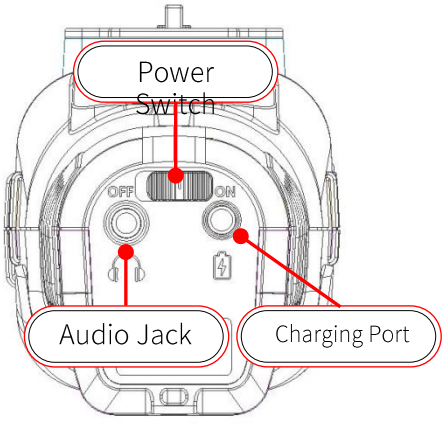

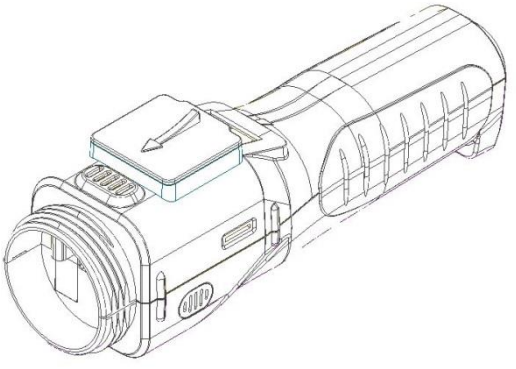

CHAPTER 1

2) Detector

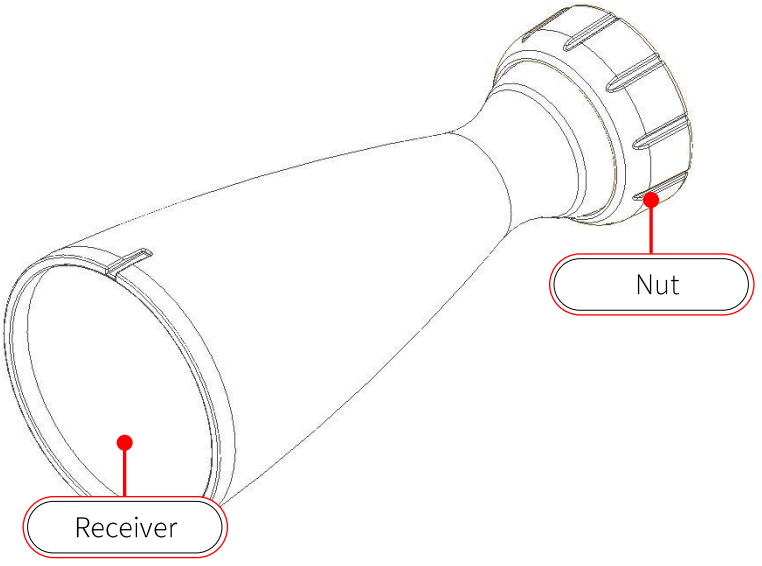

3) Camera (Infrared Camera Module)

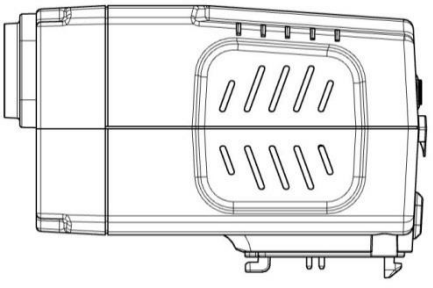

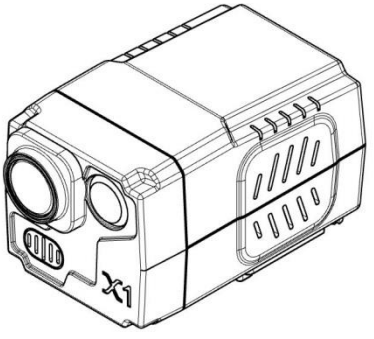

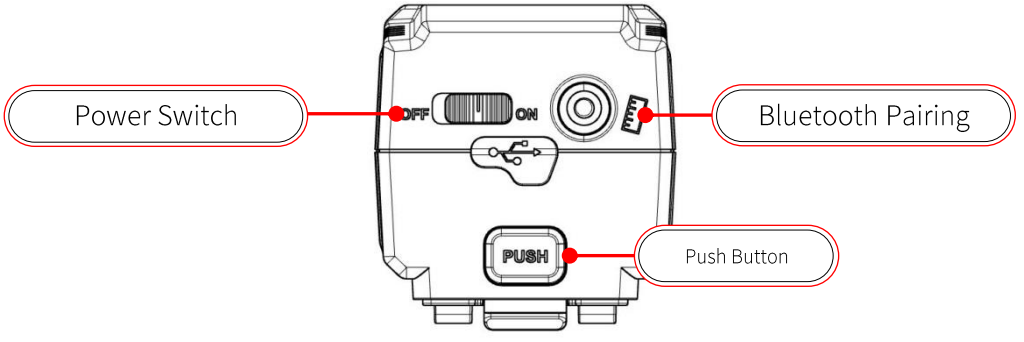

CHAPTER 1

6. Assembling the Device

6.1) Attaching the Detector to the Main Body

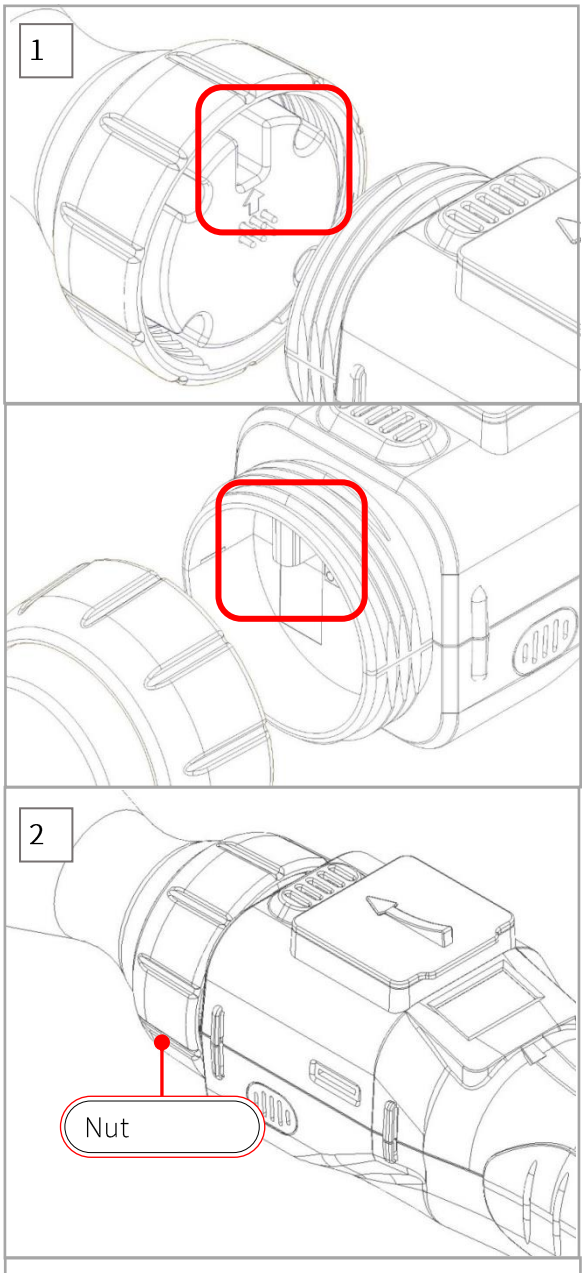

1- Keeping the marks aligned, position the detector on the main body.
2- Rotate the nut of the detector clockwise until it clicks into place.

6.2) Attaching the Camera to the Main Body/ Detaching the Camera from the Main Body

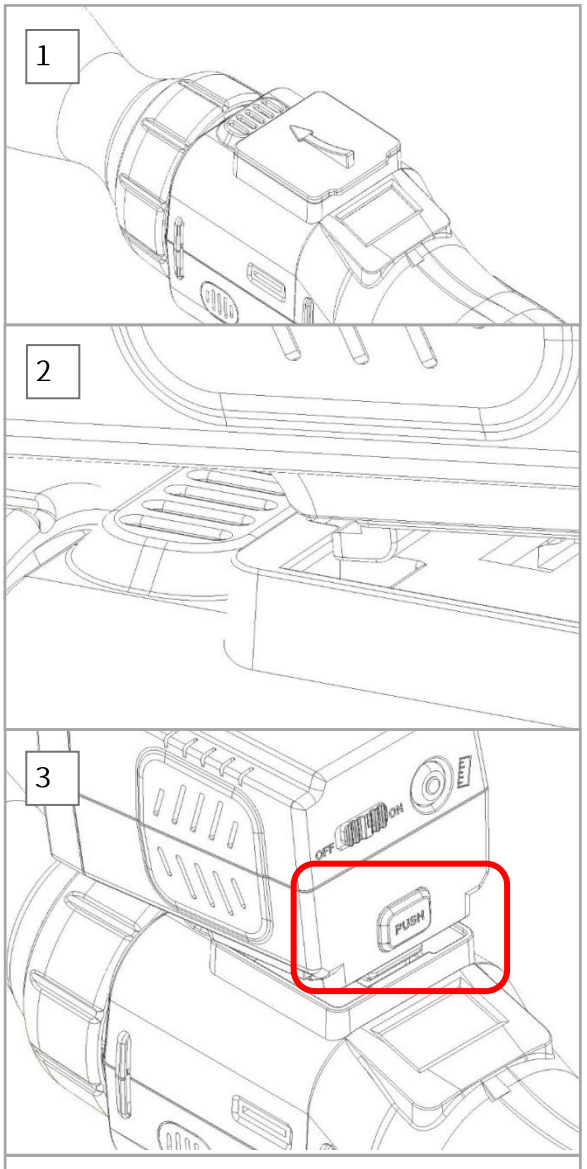

1- Lift the pin cover on the main body.
2- Keeping the marks aligned, hook the camera on the main body.
3- Push until the camera clicks into place.

Press the PUSH button and slowly lift the camera to detach from the main body.

CHAPTER 1

7. Using the Device

7.1) INSPECO X1 comes with a tablet case. Refer to the images below when using the device.

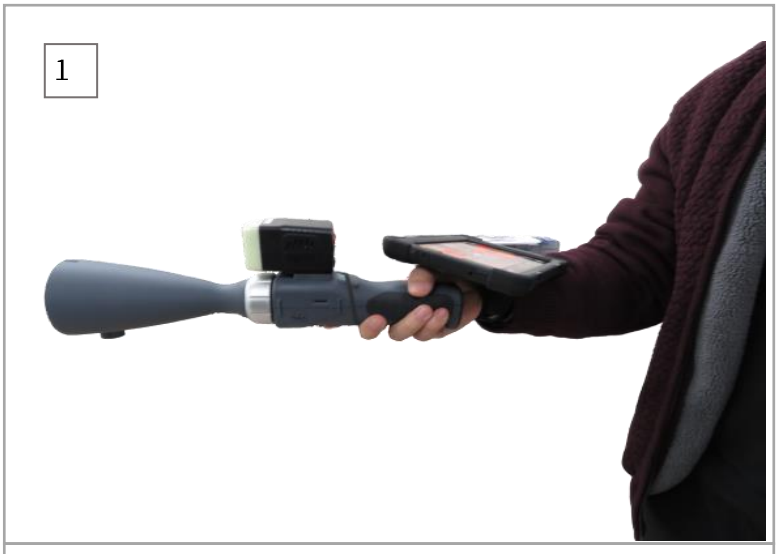

CHAPTER 2

INSPECO X1 Functions

CHAPTER 2

INSPECO X1 Functions

1. Main Screen (On-Screen Display)
2. Menu Settings
3. Main Screen Settings
4. Sound Storage
5. Device Settings

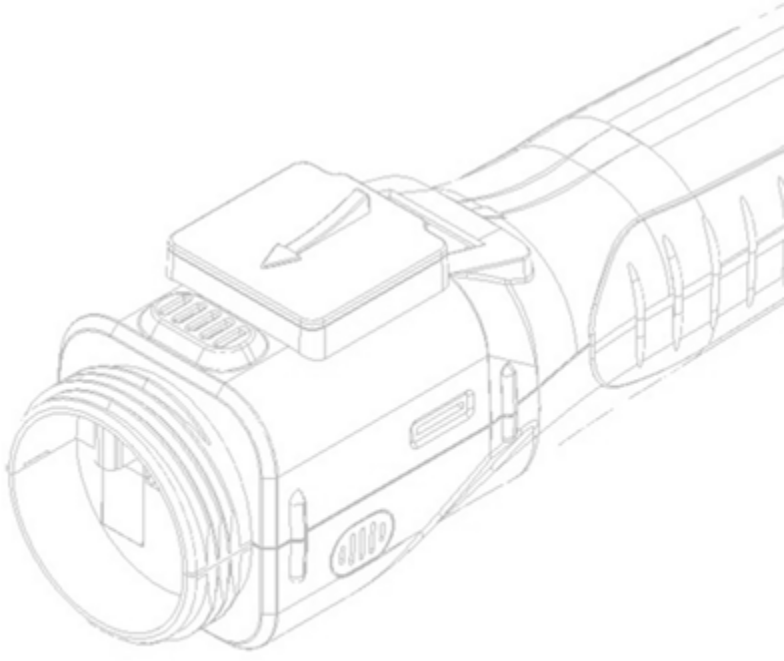

CHAPTER 2

1. Main Screen (On-Screen Display)

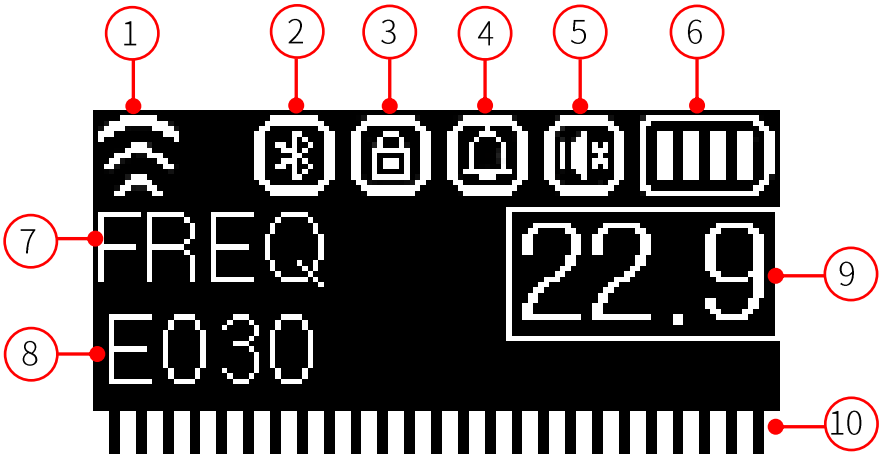

① Wireless Connection: Wireless Connection Status
② Bluetooth: Bluetooth Connection Status
③ Lock Button: Enable/Disable Lock Screen
④ Alarm: Enable/Disable Alarm
⑤ Mute: Enable/Diable Mute
⑥ Battery: Remaining Battery
⑦ Current Menu Settings- Frequency (See Below)
⑧ Range Settings - Frequency (See Below)
⑨ Measurement Value
⑩ Signal Strength Indicator

2. Main Menu Settings

Menu	Range
Frequency	E000 ~ E140
Sensitivity	000 dB ~ 300dB
Mode	REALTIME/AVG/PEAK
Sound	0 ~ 100 %
Time	Current Time
Temperature	Current Temperature
Humidity	Current Humidity
Waveform	Current Waveform
FFT	Current FFT

CHAPTER 2

3. Main Screen Settings

1) Using the default settings is recommended in order to obtain optimal measurements. (Refer to this manual to customize the settings. Contact the manufacturer for more details.)

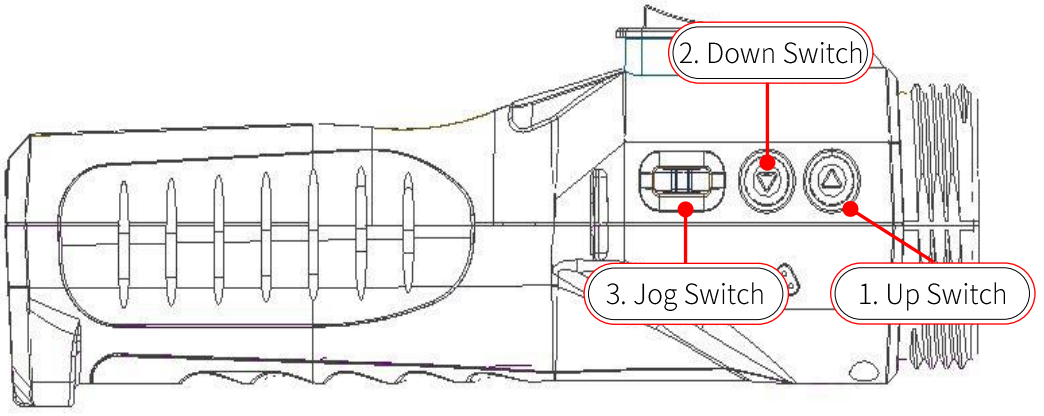

2) Enable/Disable Lock Screen: Slide down the **Jog Switch**.
3) Mute: Press and hold the **Down Switch** for 2 seconds.
4) Changing the Frequency Settings

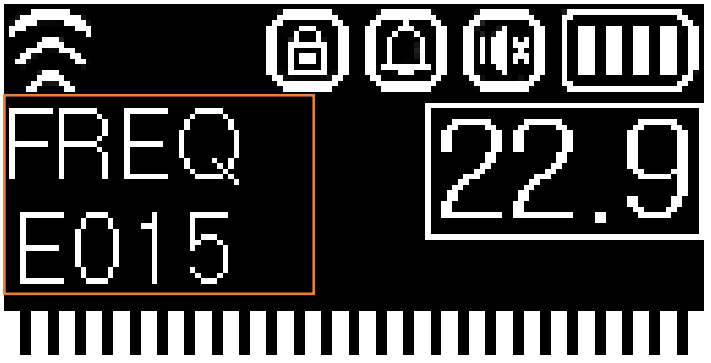

① Move to the Frequency Settings screen using the **Up/Down Switch**.
② Use the **Jog Switch** (slide left or right) to adjust the frequency value.

5) Changing the Sensitivity, Mode, and Sound Settings

① Move to the Sensitivity, Mode, or Sound Settings screen using the **Up/Down Switch**.
② Use the **Jog Switch** (slide left or right) to adjust the value.

6) Bluetooth Connection: Connect with other Bluetooth-enabled devices (headsets or earphones)

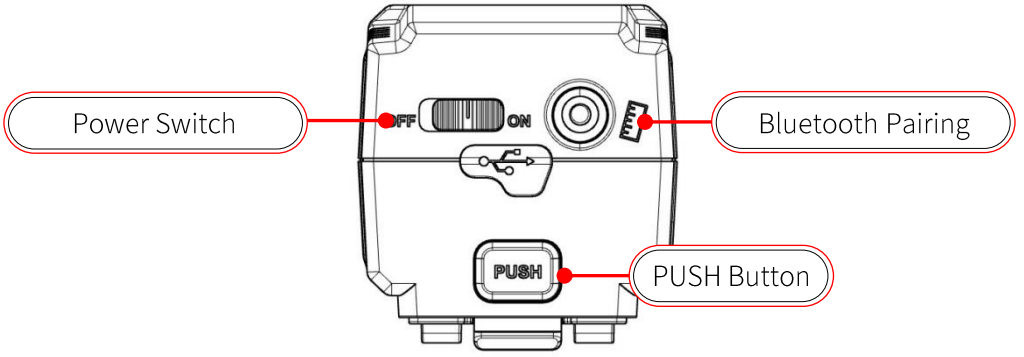

① Turn on the device you want to pair with and enable bluetooth pairing.
② Attach the camera to the main body and turn ON the camera.
③ Press the Bluetooth Pairing button to activate pairing.
④ Wait for the signal sound to confirm pairing.

4. Sound Storage

4.1 General Information
When storing a sound file, ultrasound signal, temperature, humidity, and GPS location data will be automatically saved on the SD card.

4.2 Procedure
Refer to the following steps.

① Press and hold the **Up Switch** for 2 seconds.
② Verify the file name (wav). (D-H-M-dB.wav [auto-generated file name])
③ Select REC STOP: NO and briefly slide down the **Jog Switch** once to save the file.
(Use the **Jog Switch** [slide left or right] to select REC STOP: YES and slide down the **Jog switch** once to cancel save. Holding down the **Jog Switch** will cancel recording, and the main screen will be automatically displayed.)

④ When saving is in progress, briefly slide down the Jog Switch to stop recording. The main screen will be automatically displayed.
⑤ Once recording is completed, the main screen will be displayed. (The default setting is 10 seconds for recording time.)
⑥ Refer to 5.10 in this manual to view saved sound files.

5. Device Settings (Common Settings)

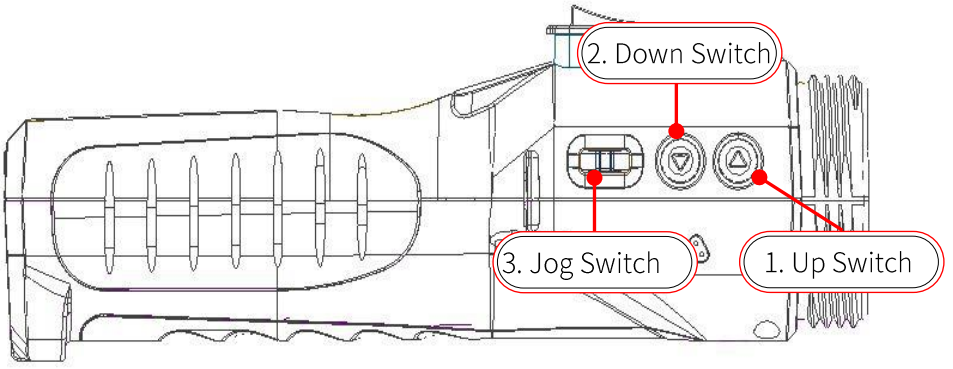

Changing the Settings

- Briefly slide down the **Jog Switch**: Open menu or save changes to settings.
- Hold down the **Jog Switch**: Exit menu or cancel changes to settings.
- Slide the **Jog Switch** left or right: Change value by 1 unit.
- Slide the **Jog Switch** left or right and hold position: Change value quickly.
- **Up/Down Switch**: Change menu.

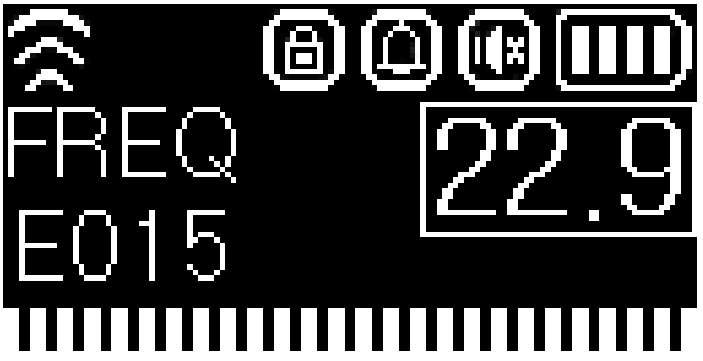

1) Settings Menu: Briefly slide down the **Jog Switch** while on the main screen.

2) Select menu using the **Up/Down Switch** (Refer to 5.1~5.16).

3) Once you select the menu, briefly slide down the **Jog Switch** to enter Settings.

4) Use the **Up/Down** Switch to select the sub-menu.
5) Slide the **Jog Switch** left or right to adjust the value.

6) Briefly slide down the **Jog Switch** to save changes. (“OK” message will be displayed, and the main screen will appear.)
7) Hold down the **Jog Switch** to cancel changes. (Settings screen will appear.)

8) While on Settings, hold down the **Jog Switch** to navigate to the main screen.

CHAPTER 2

5.1. Alarm/Keytone Settings

1) Alarm: If the device detects a signal that exceeds the default dB level (default alarm level), an alarm will sound to notify the user.
2) Default Alarm Level: Select the default alarm level (-10 ~ 50 dB).
3) Alarm: Enable/Disable Alarm
4) Keytone: Enable/Disable Keytone

5.2. Measurement Settings

1) Default Sensitivity Level: Select the default sensitivity level (0~30dB).
2) Mute Timer: Set Mute Timer (1~60 seconds) to enable **Mute** after a certain period of time if the detected signal is below the default sensitivity level.
3) Auto Mute: Enable/Disable Auto Mute

Auto Mute: If the current signal is below the default sensitivity level, Auto Mute is enabled after a certain period of time set by the user. If the current signal is above the default sensitivity level, Auto Mute is automatically disabled.

5.3 Time/Date Settings

1) Format: Year/Month/Day & Month/Day/Year
2) Default Setting: Year/Month/Day/Hour/Minute

5.4. Offset Settings

1) Select the offset correction value for measurements if necessary. The correction value will adjust the dB value displayed on the main screen.
2) Offset: Select the dB correction value (0~90dB).

5.5. WAV File Settings: Ultrasound is converted into an audible frequency band and saved as a WAVE file.

1) Save File: Enable/Disable Save File. If disabled, you will not be able to save a file.
2) Recording Time: Select the Recording Time for your WAV file (5~180 seconds). The default setting is 10 seconds.
3) File Name: Select the preferred nomenclature for your WAV file (Day-Hour-Minute-dB / Code-Hour-Minute-dB).

5.6. Equalization Settings

1) Adjust the sound bandwidth.
2) Select a value: 105Hz/300Hz/850Hz/2.4KHz/6.9KHz (-12 ~ 12 dB).

5.7. Response Time

1) Select a cycle for displaying the dB value of the measured signal.
2) Response Time: 0 ~ 2 seconds (Default setting is -0 seconds.)

5.8. Diagnosis: Distance Settings

1) Distance Auto Input: Enable/Disable
2) Manual Input: Setting unavailable (10 ~ 30m [adjust the distance in +1 or –1m increments])

5.9. Other Settings: Latency Time and AGC Settings

1) Latency Time: 0 ~ 60 seconds (Adjust the time in +5 or –5 second increments)
2) AGC Adjustment: 5dB ~ 30dB (Adjust the volume in +1 or –1 dB increments)
3) AGC: Enable/Disable AGC

5.10. SD File Management Settings

1) View list of saved files.

5.11. Format SD Card

1) Format the SD Card to erase your data.
2) [Warning] Before formatting the memory card, remember to make backup copies of all important data stored in the memory card. The manufacturer's warranty does not cover loss of data resulting from user actions.

5.12. Language Settings

1) Language: Select your preferred Language (Korean/ Chinese [Simplified]/ English).

5.13. Facility Settings

1) Factory Default Settings: FREQ-E015 / SENS-200dB / VOL-014% / MOD-REAL
2) Default values automatically change depending on the selected facility type.
3) Facility Type: Distribution Line-D/L, Transmission Line-T/L, Substation-S/S, Gas-GAS, Pipeline-P/L

A. DL: FREQ: E015 /Sens: 200dB /Volume: 50%
B. TL: FREQ: E030 /Sens: 250dB /Volume: 50%
C. SS: FREQ: E030 /Sens: 200dB /Volume: 50%
D. GAS: FREQ: E015 /Sens: 250dB /Volume: 50%
E. PL: FREQ: E015 /Sens: 250dB /Volume: 50%

4) Using the default settings is recommended by the manufacturer. Values may be adjusted depending on the situation.
5) E030 is recommended for general inspections. E015 is suitable for detecting weak signals.

5.14. Tablet Connection Settings

1) Table Connection: Connect the device to a table PC.
2) Connection: Enable/Disable
3) Link: Enable/Disable Control Access

5.15. Temperature Settings

1) Format: °C / °F
2) Offset: Adjust temperature values (Adjust the temperature in +1 or –1 °C / °F increments)

5.16. Default Settings

1) Reset the device to default settings.

5.17. Exit Menu

•Hold down the **Jog Switch** for 2 seconds to exit the Settings Menu.
•Once you exit the Settings Menu, the main screen will appear.

CHAPTER 3

INSPECO X1

Mobile Application Programs

CHAPTER 3

Mobile Application Programs

1. Connecting Your Device to a Tablet PC
2. Application Main Screen
3. Integrated Diagnosis Mode
4. Camera (Ultrasound) Mode
5. Thermal Imaging (Infrared) Camera Mode
6. Status Diagnosis
7. Creating a Report
8. Settings
9. Data Sharing
10. Warning Message

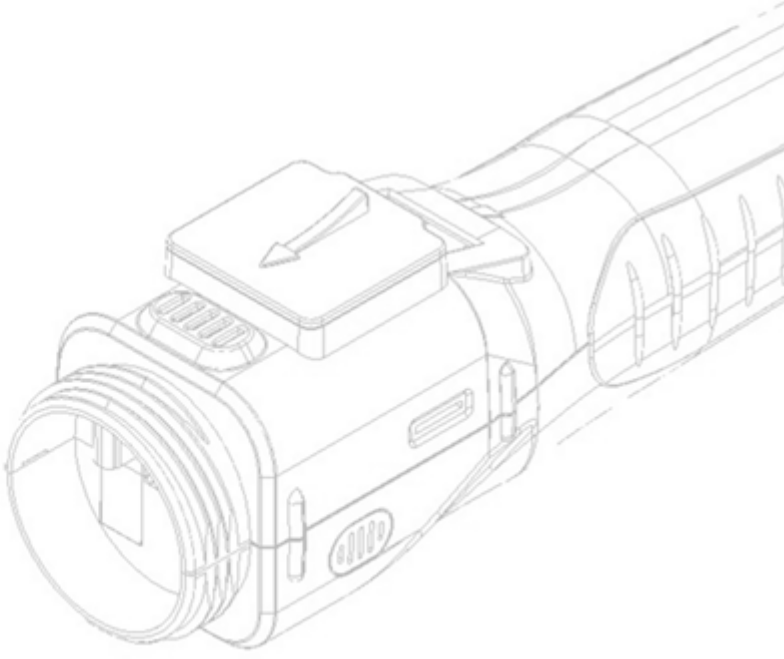

CHAPTER 3

1. Connecting Your Device to a Tablet PC

1) Tablet WI-FI
* Before reinstalling the app:
* Erase the previously installed app and X1 folder from your tablet PC.

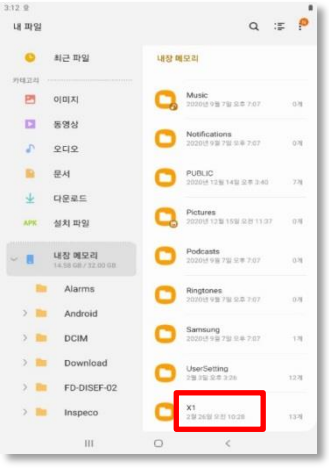

2) Download the app installer on your Tablet PC.
* The app installer is only compatible with Android OS.

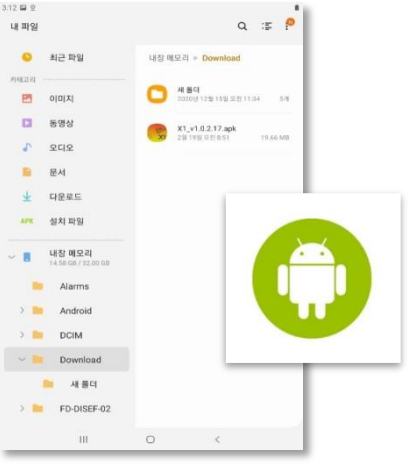

3) Install the app.
Grant access to the app.

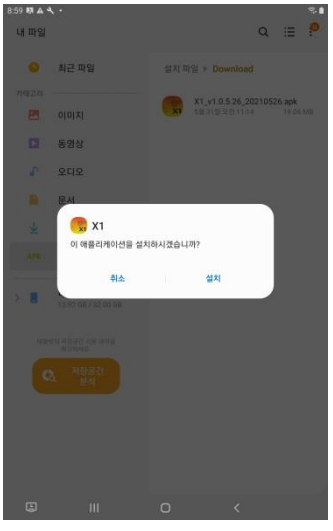

4) Install PDF Viewer from Play Store
(to view the application manual).

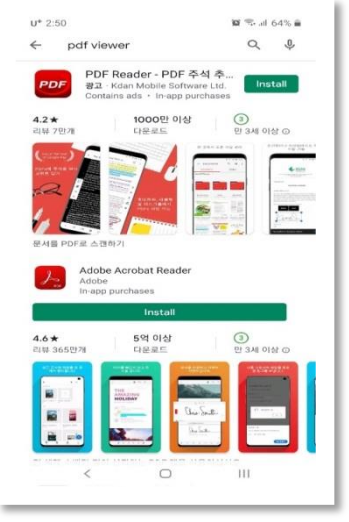

1) Select **TABLET CONNECTION** from the Settings Menu and briefly slide down the **Jog Switch**.

2) Select **CONNECTION ON** and briefly slide down the **Jog Switch**.

3) The **CONNECTION** icon appears on the status bar at the top of the screen.

4) Search for your device in the Wi-Fi Settings menu.
*Device Name: INSEPCO_DEMO_00 (CODE: W:0123456789)

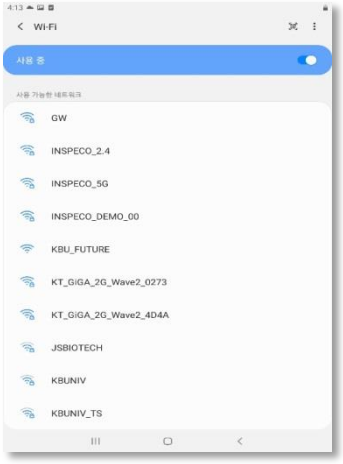

5) Select your device.
*Only a single tablet PC can connect with your device.
* When connecting your device to a tablet PC, ensure that the Wi-Fi feature is deactivated for all nearby devices (tablet PCs).
* When switching to a new table PC, make sure to erase credential contents (including information about the Wi-Fi connection) from the original tablet PC.

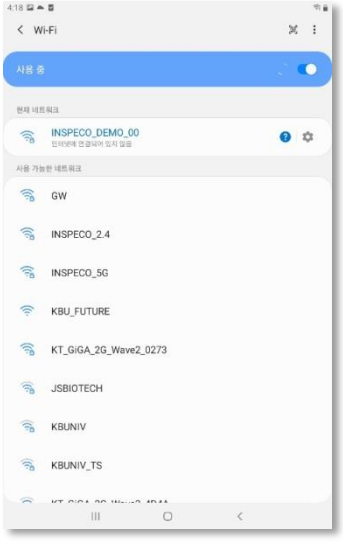

6) Insert the cable into the USB Type-C port. (Make sure the device is turned OFF.)

7) Connect your device to the table PC using the cable.

8) Application Launch Screen

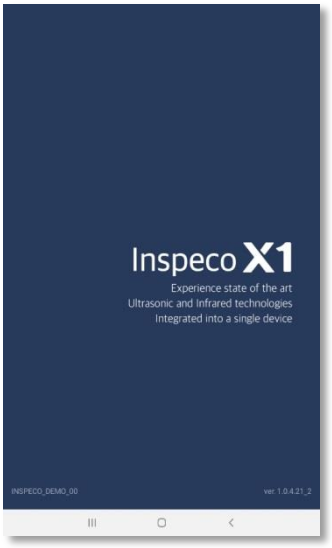

9) From the list of Wi-Fi networks, select your device.

10) **Option 1:** Select your profile.

11) View your saved profiles. (You can choose to manage each of your saved profiles.)

12) **Option 2:** Guest mode

13) **Option 3:** Create a new profile. Enter your profile name and press save.

14) When prompted, choose to grant the X1 app access to null.

15) When prompted, choose to grant the X1 app access to Xmodule-S0.

2. Application Main Screen

2.1 Main Screen

① Open menu
② Temperature
③ Humidity
④ Tablet PC Connection
⑤ Wi-Fi Connection
⑥ GPS Coordinates
⑦ Realtime dB Value
⑧ Realtime dB Value (measuring the dB level in realtime)
⑨ Integrated Diagnosis Mode
⑩ Camera (Ultrasound) Mode
⑪ Infrared Camera Mode
⑫ Create Report
⑬ Average dB Level
⑭ Ultrasound Waveform

2.2 Menu

1) Press the icon located at the top left corner of the screen to open the main menu.

2) Main Menu Screen

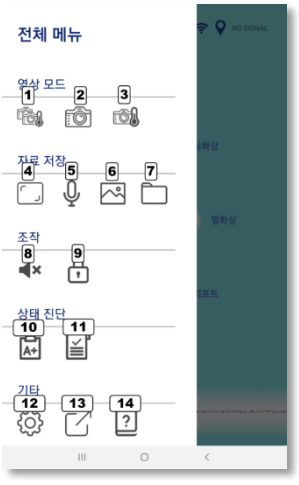

① Open Integrated Diagnosis Mode
② Switch to Camera (Ultrasound) Mode
③ Switch to Infrared Camera Mode
④ Take a Screenshot
⑤ Record Sound
⑥ Open Gallery
⑦ Open Browser
⑧ Mute
⑨ Lock Screen
⑩ Open Status
⑪ Create Report
⑫ Settings
⑬ Data Sharing
⑭ User Manual

3) Tap the **Screenshot** icon to capture a screenshot.

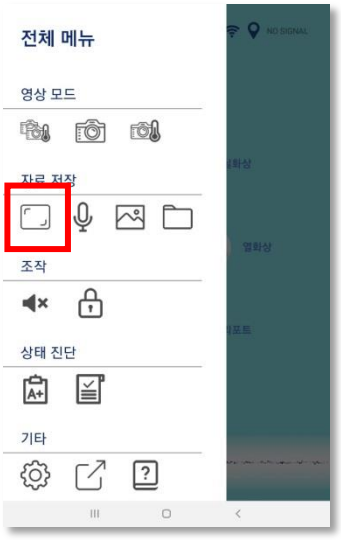

4) The screenshot is automatically saved to the **Gallery**.

5) Tap the **Record Sound** icon to initiate recording.

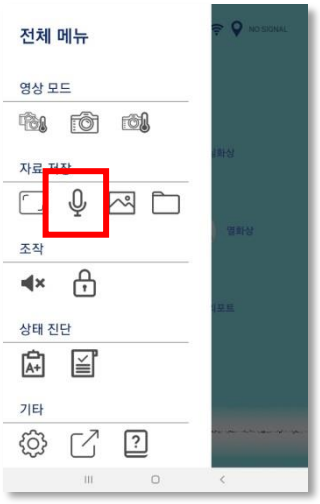

6) Press “Okay” to proceed and start recording ultrasound signals.

7) Tap the **Gallery** icon to access your images and videos.

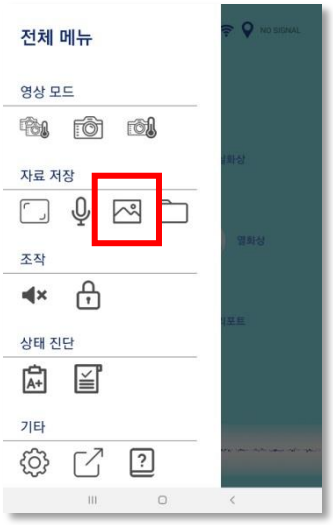

8) View and manage all saved images and videos from the **Gallery**.

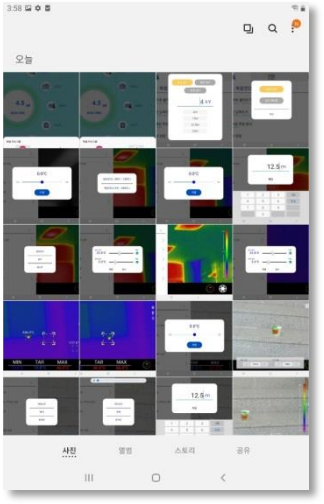

9) Tap the **Bowser** Icon.

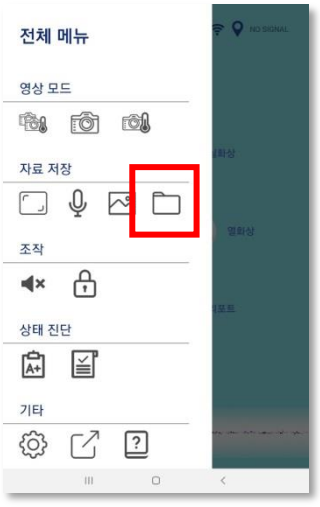

10) Search for saved files or folders.

11) Tap the **Mute** icon and set the device to mute ultrasound signals.

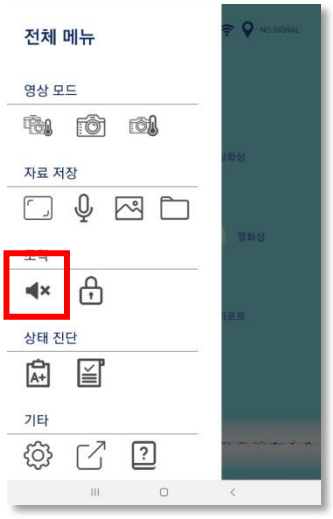

12) Tap the **Mute** icon again to deactivate.

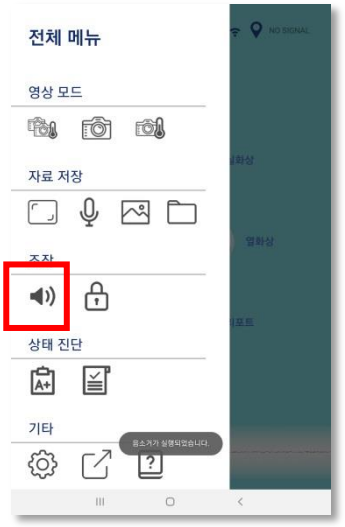

13) Tap the **Lock Screen** icon to lock the screen.

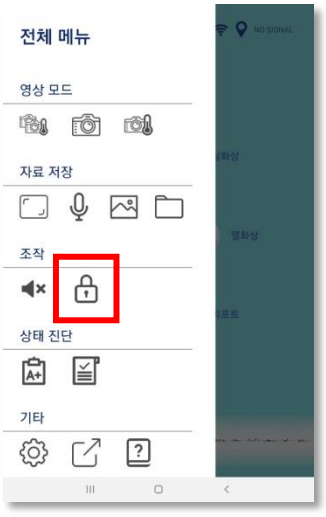

14) To unlock the screen, tap the **Lock** icon located at the top left corner of the screen.

15) Tap the **Status** icon to switch to status diagnosis mode.

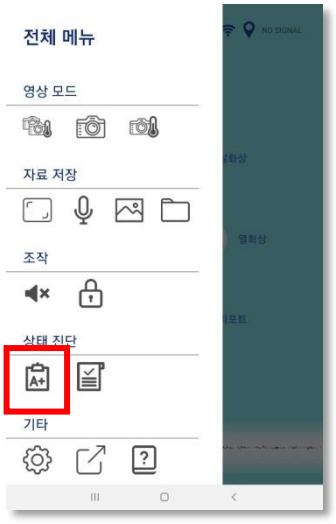

16) Tap the **Create Report** icon to create a report.

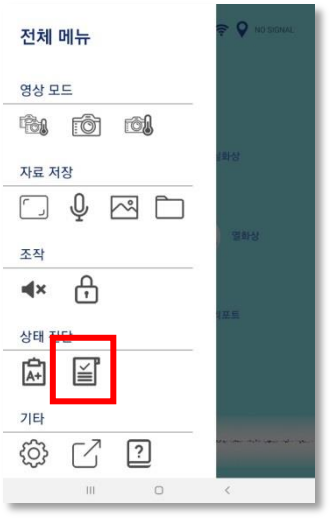

17) Tap the **Settings** icon to launch **Settings**.

18) Tap the **Data Sharing** icon to share your data.

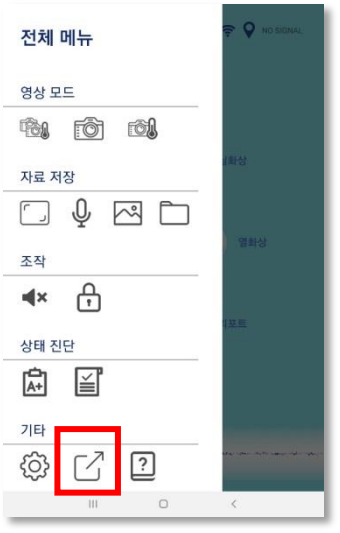

19) Tap the **Manual** icon to view the user manual.

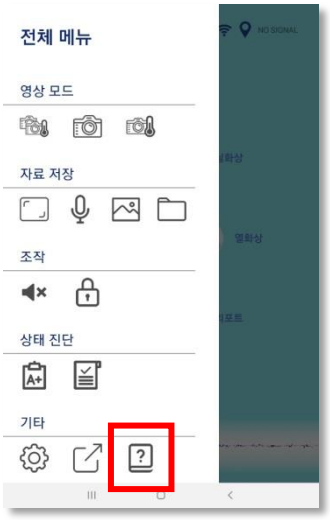

20) Install PDF Viewer to access the user manual.

CHAPTER 3

3. Integrated Diagnosis Mode

Warning: When you switch to Infrared Camera mode, wait about 5 minutes before use for accurate measurement.

3.1 Infrared Camera

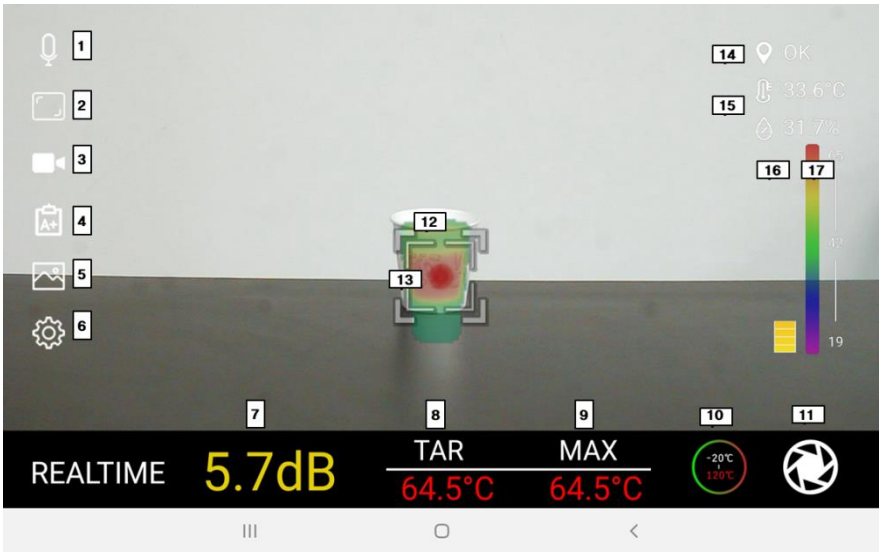

① Record Sound
② Take Screenshot
③ Record Video
④ View Status
⑤ Open Gallery
⑥ Settings
⑦ Realtime dB Level
⑧ Target Temperature
⑨ Peak Temperature (Maximum)
⑩ Temperature Mode
⑪ Thermal Imaging (Infrared) Settings
⑫ Target
⑬ Ultrasound Level
⑭ GPS Status
⑮ Temperature, Humidity
⑯ Gauge Meter
⑰ Temperature Range

3.2. Using the Infrared Camera

3.2.1) Tap the **Record Sound** icon.

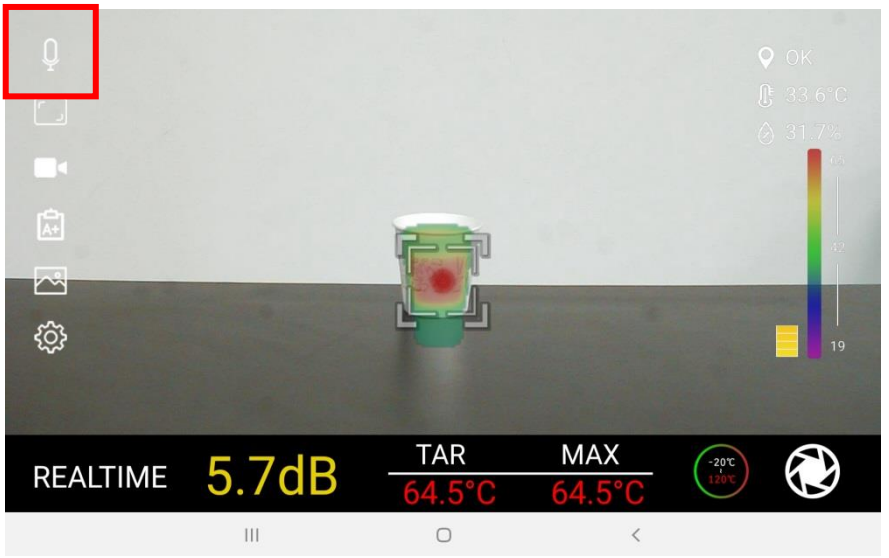

3.2.2) When prompted, press “Okay” to proceed with the recoding. Press “Cancel” to return to the screen.

3.2.3) Once you start recording, a gauge meter depicting the ultrasound level will appear on the right.

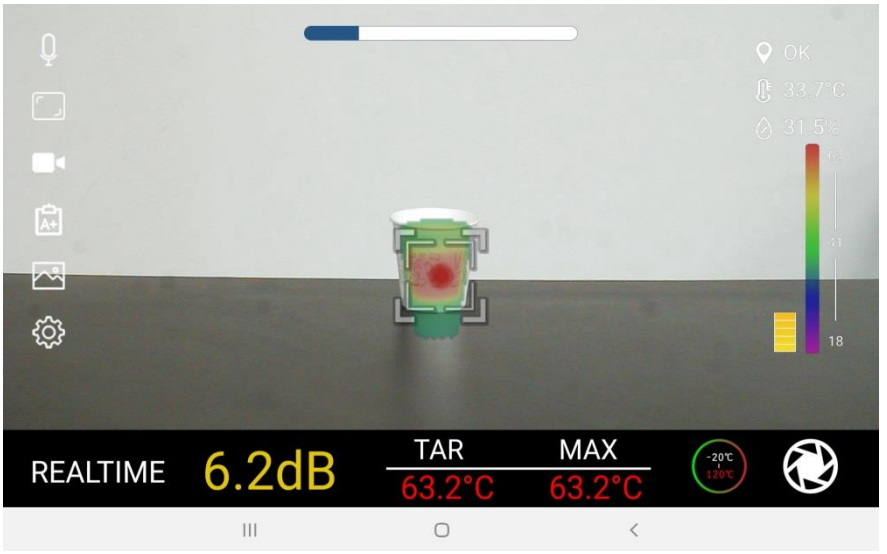

3.2.4) Tap the **Screenshot** icon to capture the current screen. The screenshot is automatically saved to the **Gallery**.

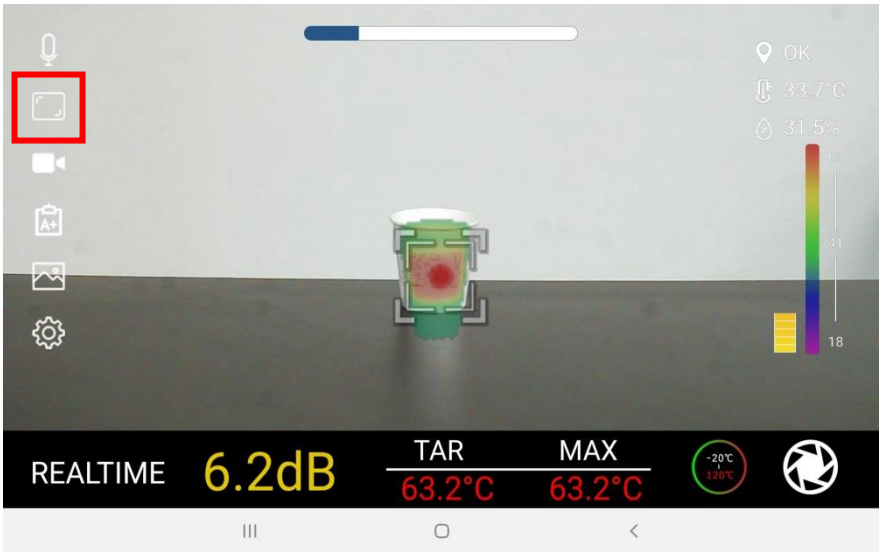

3.2.5) Tap the **Video** icon to initiate video recording.

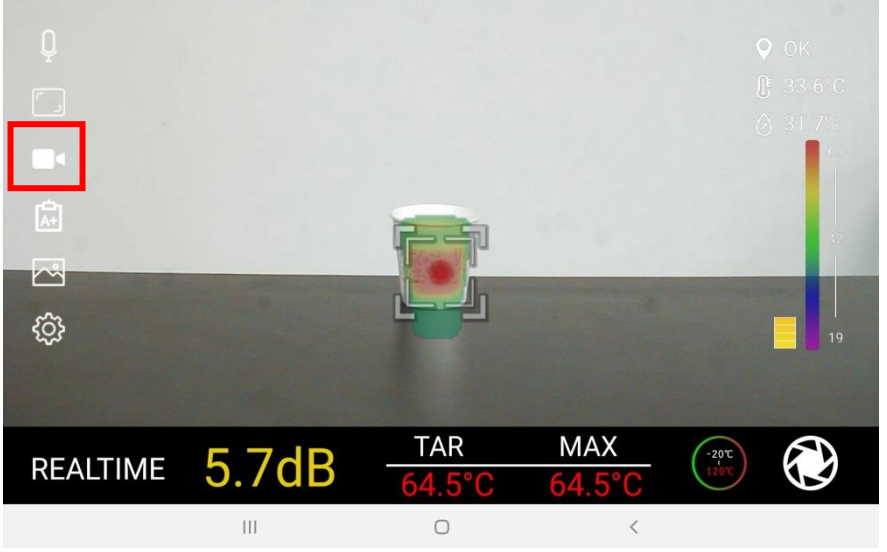

3.2.6) While video recoding is in progress, the recoding time and **Pause** icon will appear on the screen. Tap the **Pause** icon to stop recording. The video is automatically saved to the **Gallery**.

3.2.7) Tap the **Status** icon to switch to Status Diagnosis mode.

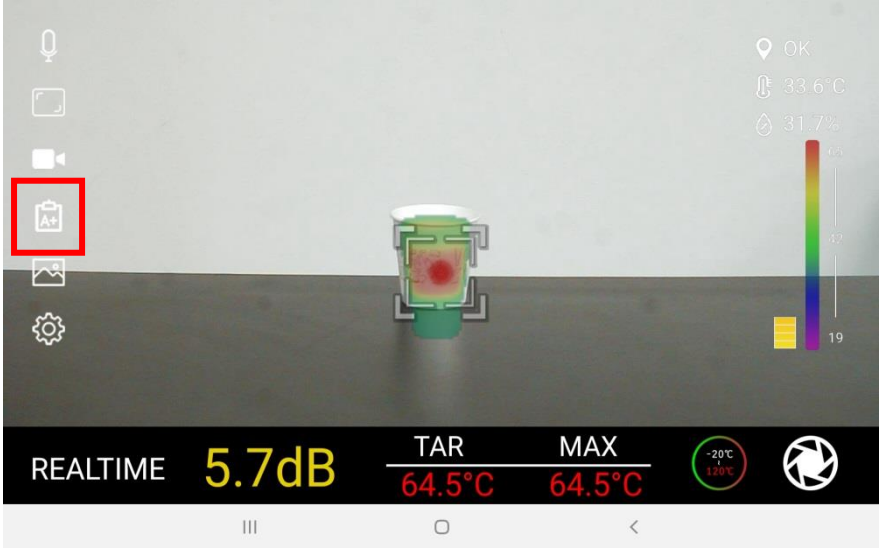

3.2.8) Tap the **Gallery** icon to open **Gallery**.

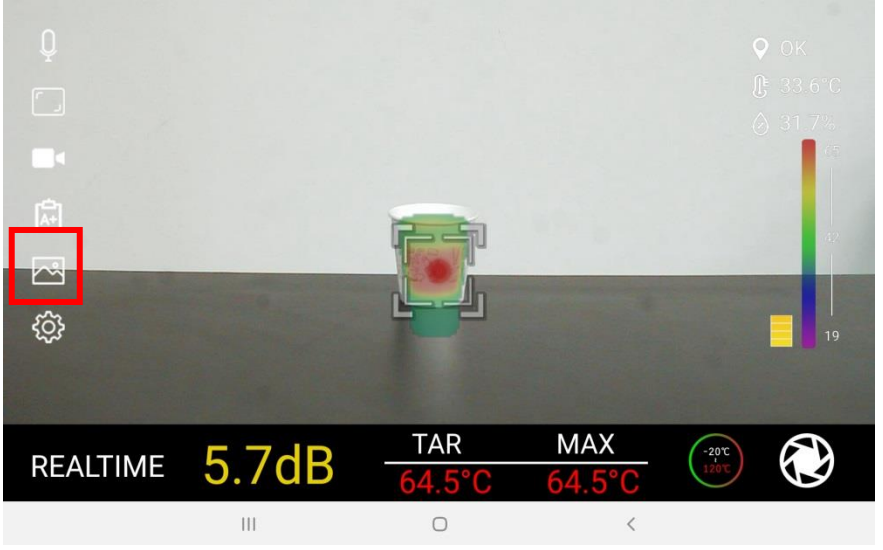

3.2.9)) Align the infrared image with the target. Temperature of the target and maximum temperature are indicated on the screen. Ultrasound dB level is indicated at the bottom left corner.

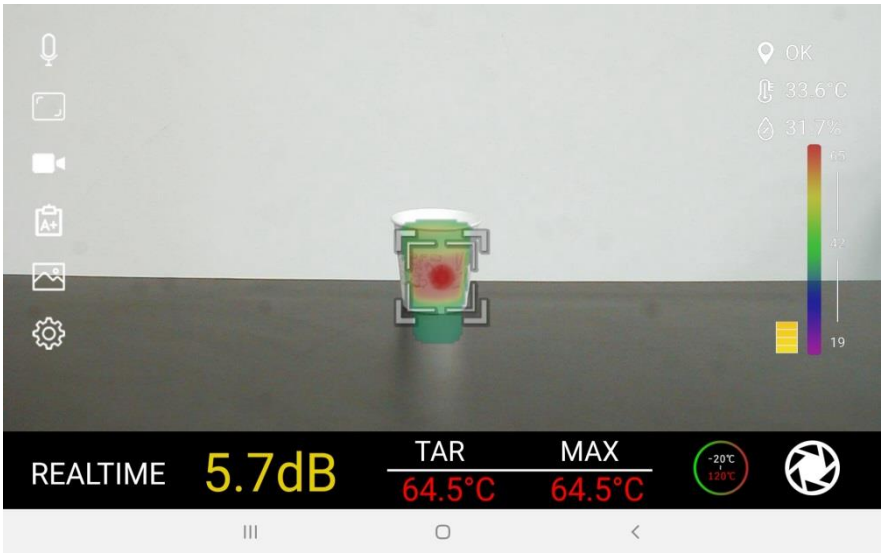

3.2.10) Tap the **Temperature Mode** icon to switch from the default range setting to extended range setting and vice versa.

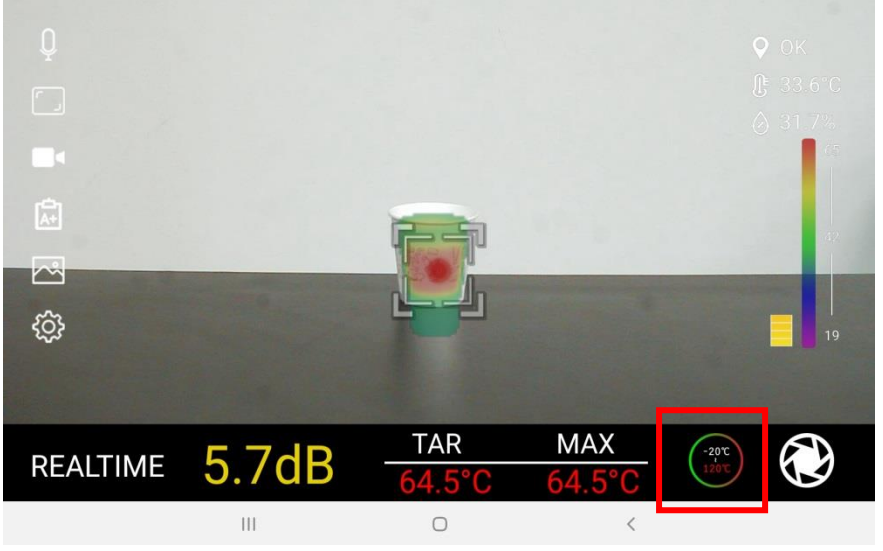

3.2.11) When you tap any location on the screen, the corresponding point is displayed as a square and the temperature is indicated. You can designate up to 10 squares on the screen. Tap the corresponding point again to remove it from the screen.

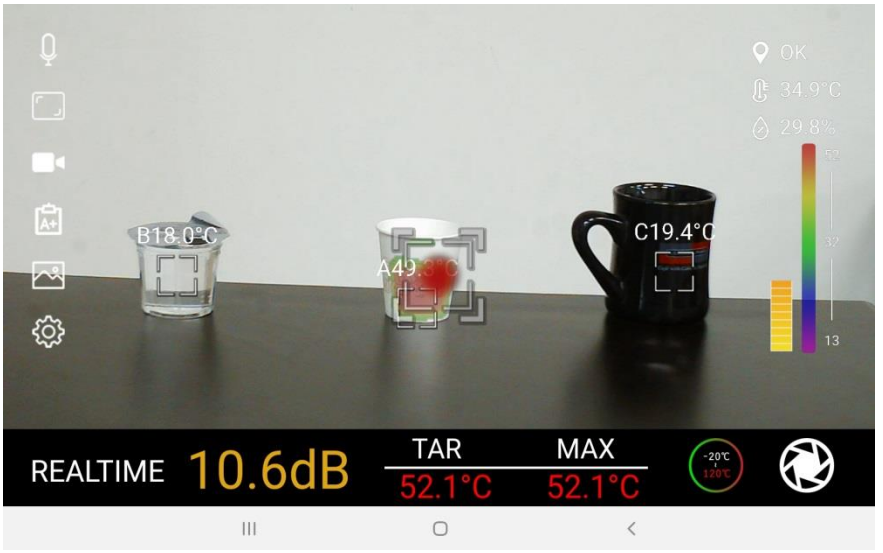

3.2.12) The infrared image is displayed only when the temperature is above the designated temperature level.

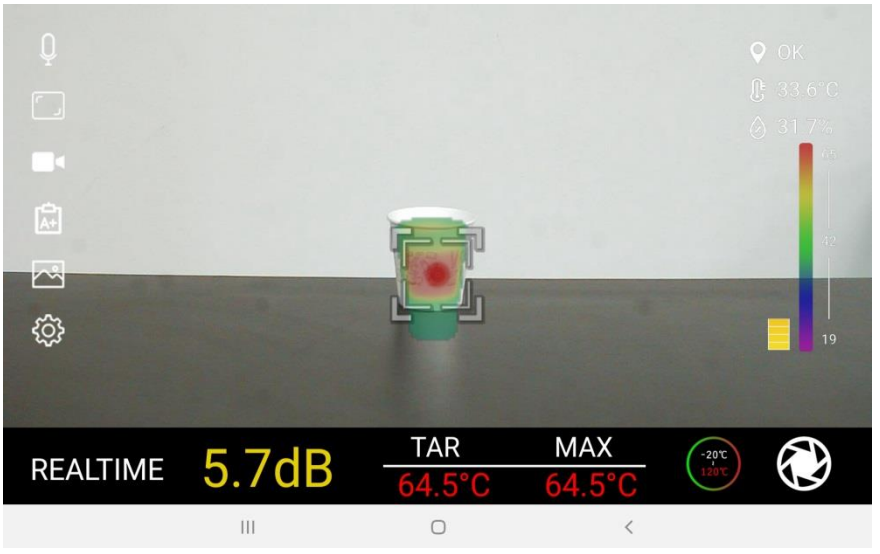

3.2.13) Tap the **Settings** icon to open the Settings Panel.

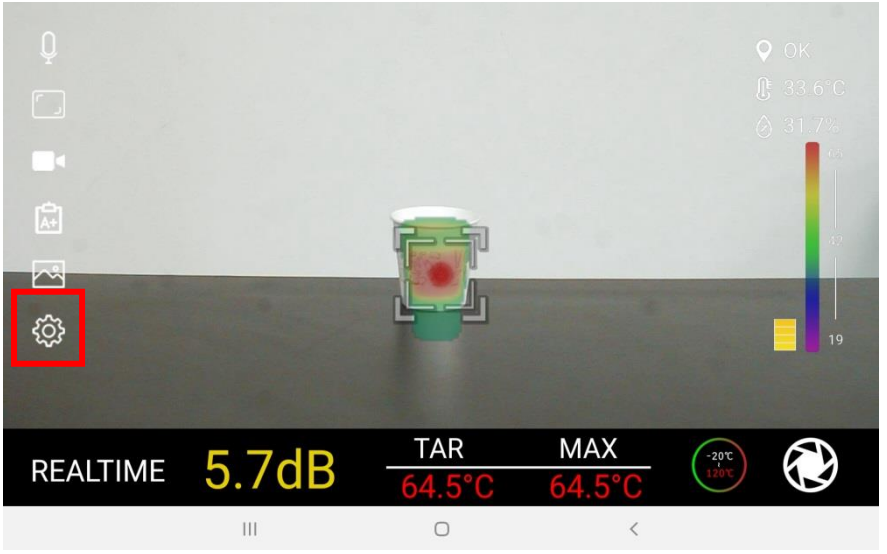

3.3) Settings Panel

3.3.1) Adjust your **Temperature Range Settings.**

3.3.2) Adjust your **Opacity Level & Minimum Temperature Level Settings.**

- Minimum Temperature Level: Setting the minimum temperature level enables the device to overlay infrared images on the screen once the minimum temperature is reached.
- Opacity Level: Select the opacity level of the infrared image.

3.3.3) Adjust your **Distance Settings** (Distance from the target [Default setting: 12.5m]).

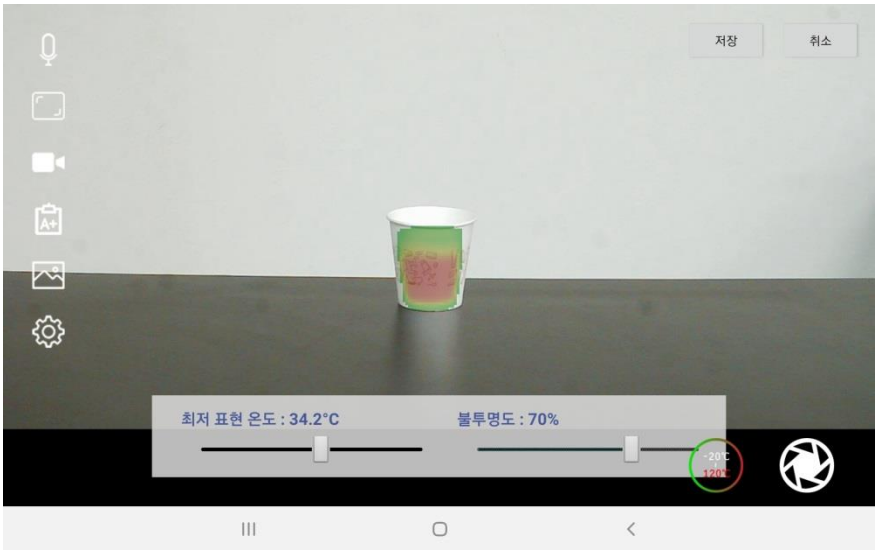

3.3.4) Adjust your **Color Palette Settings.**

- Select a color palette for the infrared image: Rainbow/Amber/White. (Select an appropriate palette depending on your environment).

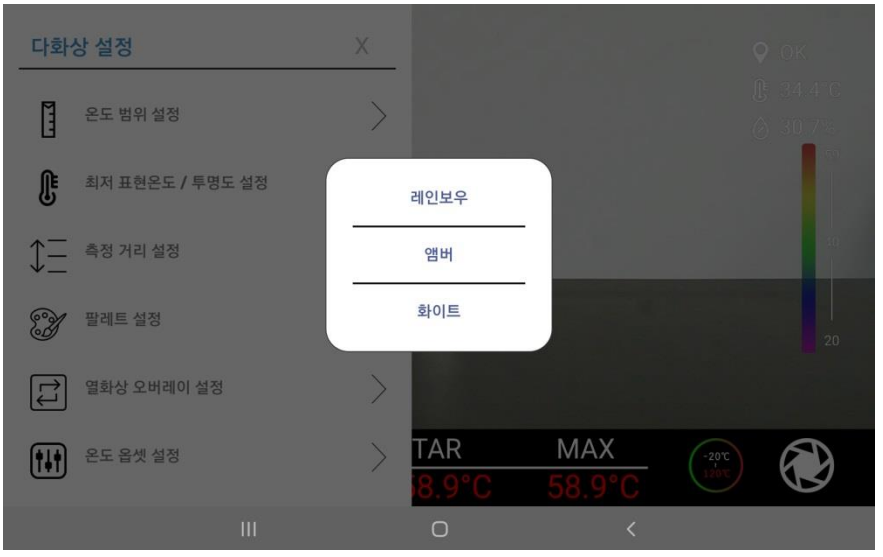

3.3.5) Adjust your **Screen Overlay Settings.**

- You can adjust the size of the infrared image by dragging the size adjustment bar. After adjusting the size of the image, drag it to your preferred location on the screen and press the Save button.

3.3.6) Adjust your **Offset Settings.**

- Adjust the temperature values depending on your environment.

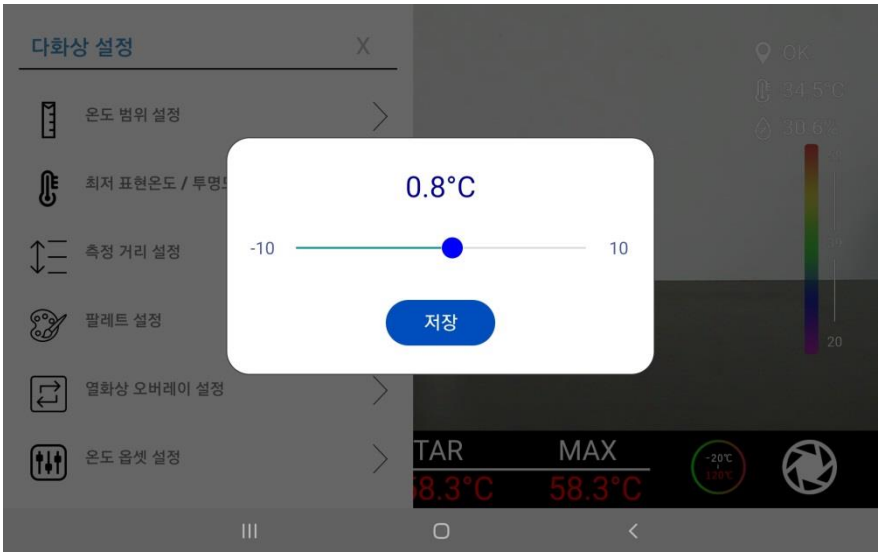

3.3.7) Adjust your **Temperature Mode Settings.**

- Default Range: -20°C ~ 120°C
- Extended Range: 100°C ~ 600°C

3.4.) Infrared Settings

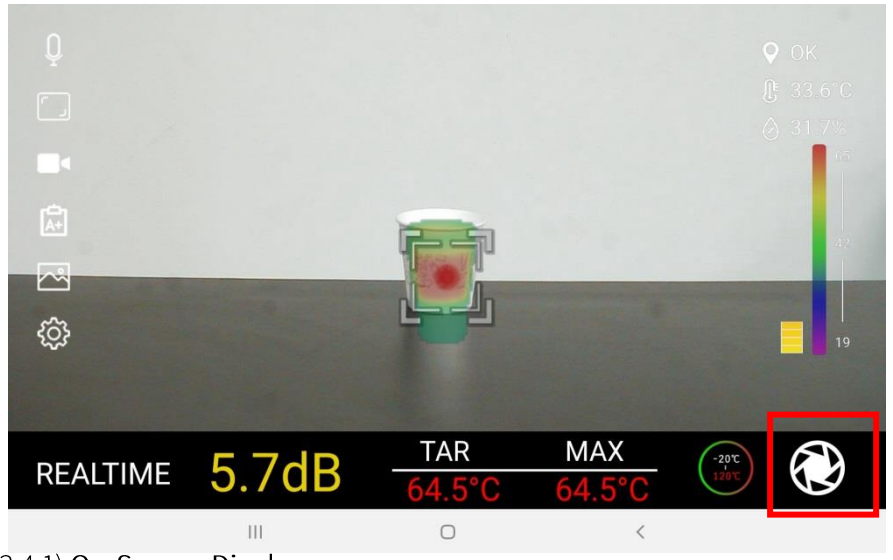

3.4.1) On-Screen Display

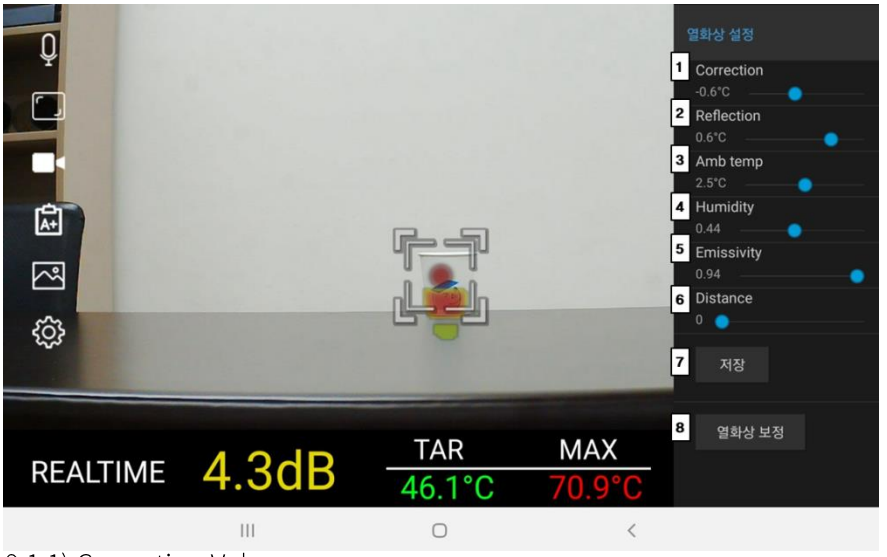

9.1.1) Correction Value
9.1.2) Reflection Value
9.1.3) Amb Temp
9.1.4) Humidity
9.1.5) Emissivity
9.1.6) Distance from the Target
9.1.7) Save Settings
9.1.8) Calibration

CHAPTER 3

4. Camera (Ultrasound) Mode

4.1) On-Screen Display

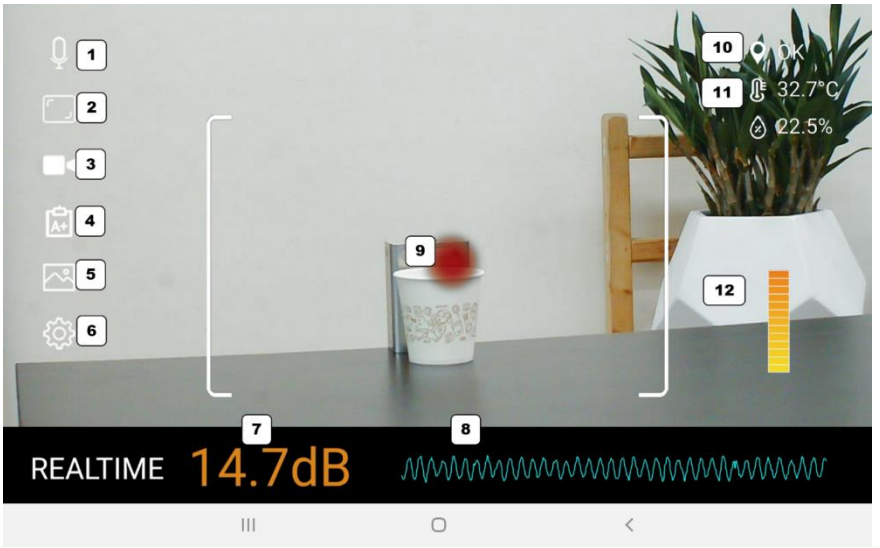

① Record Sound
② Screenshot
③ Video
④ Status
⑤ Gallery
⑥ Settings
⑦ Realtime dB
⑧ Ultrasound Waveform
⑨ Ultrasound Level
⑩ GPS Status
11 Temperature, Humidity
12 Ultrasound Gauge Meter

4.2) Using the Camera (Ultrasound) Mode

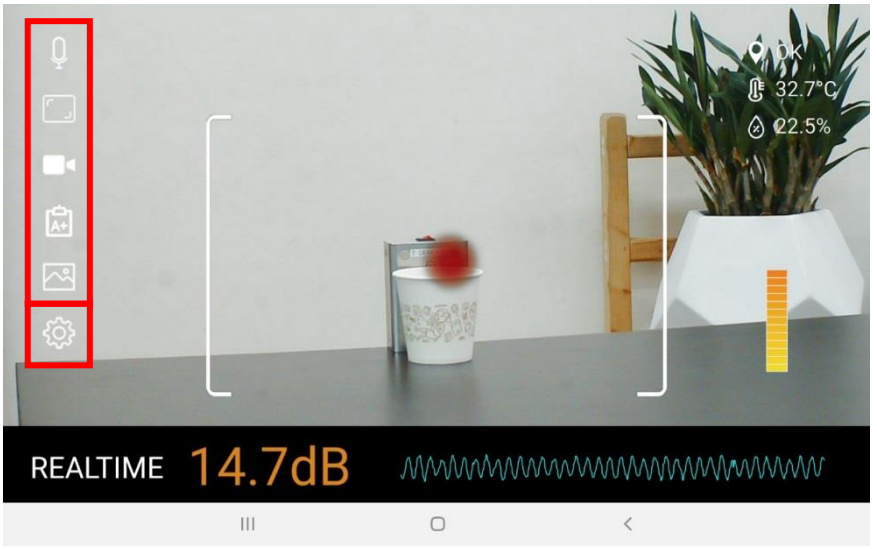

4.2.1) Using the **Record Sound, Screenshot, Video, Status, Gallery** features: Same as the **Integrated Diagnosis Mode**

4.2.2)n order to create a report, you must take screenshots of the entire facility and the defective equipment (target). At lease 2 screenshots must be taken to create the report. Once you tap the **Settings** icon, the Ultrasound Settings Panel will appear on the left.

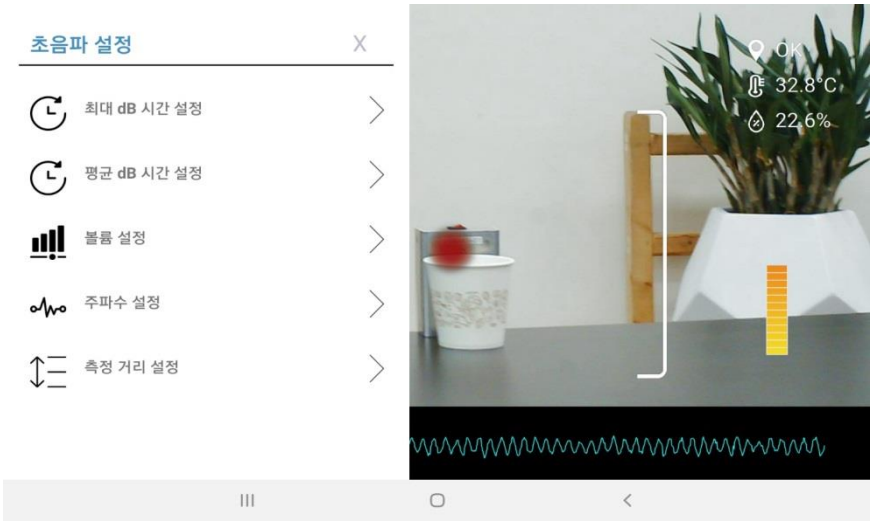

CHAPTER 3

4.3) Ultrasound Settings

4.3.1) Maximum dB Reference Time Point: Reference time point to calculate the maximum dB level

4.3.2) Average dB Reference Time Point: Reference time point to calculate the average dB level

4.3.3) Volume: Volume of the ultrasound signal

4.3.4) Frequency

4.3.5) Distance

5. Infrared Camera Mode (Different from the infrared Camera in Integrated Diagnosis Mode)

5.1) On-Screen Display

① Screenshot
② Video
③ Status
④ Gallery
⑤ Settings
⑥ Minimum Temperature
⑦ Target Temperature
⑧ Maximum Temperature
⑨ Temperature Mode
⑩ Infrared Settings
⑪ Target
⑫ GPS Status
⑬ Temperature, Humidity
⑭ Temperature Range

CHAPTER 3

5.2) Using the Infrared Camera Mode

5.2.1) Using the **Record Sound, Screenshot, Video, Status, Gallery** features: Same as the **Integrated Diagnosis Mode**

5.2.2) Once you tap the **Settings** icon, the **Infrared Settings** Panel will appear on the left.

5.2.3) Align the target to the center of the screen. Temperature of the target, maximum and minimum temperatures are indicated on the screen.

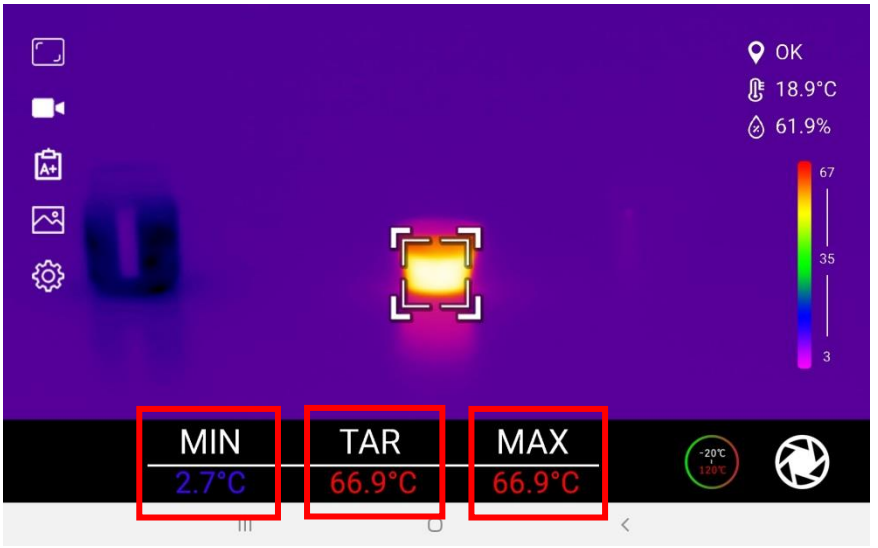

5.2.4) When you tap any location on the screen, the corresponding point is displayed as a square and the temperature is indicated. You can designate up to 10 squares on the screen. Tap the corresponding point again to remove it from the screen.

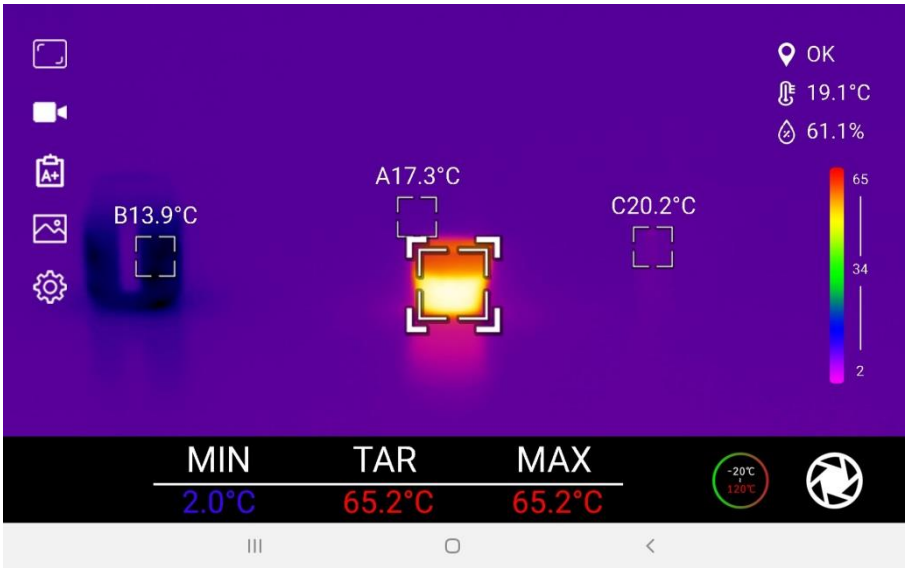

5.3) Infrared Settings Panel

5.3.1)Adjust your **Color Palette Settings.**
Select a color palette for the infrared image: Rainbow/Amber/White.
(Select an appropriate palette depending on your environment.)
5.3.2) Adjust your **Distance Settings** (Distance from the target).
5.3.3) Adjust your **Offset Settings.**
Adjust the temperature values depending on your environment.
5.3.4) Adjust your **Temperature Mode Settings**
- Default Range: -20°C ~ 120°C
- Extended Range: 100°C ~ 600°C

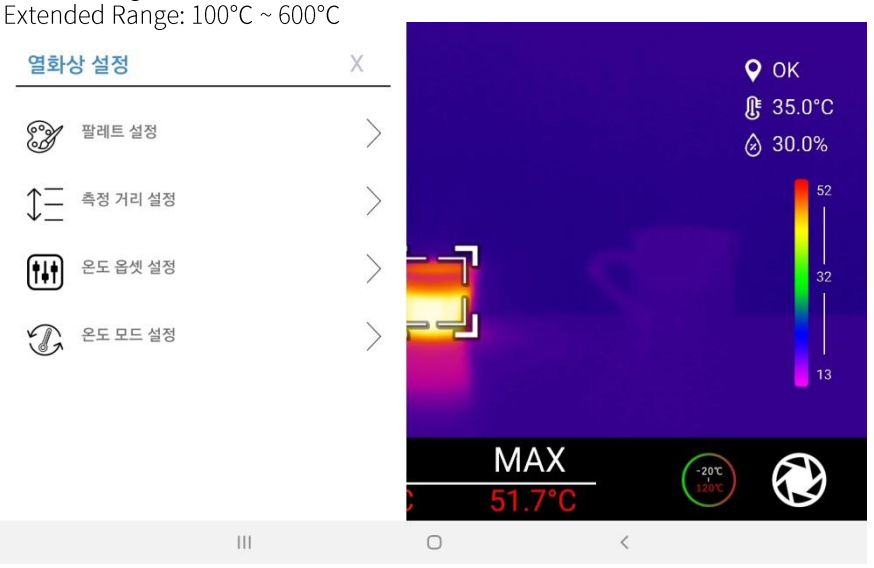

6. Status Diagnosis

6.1) Open Status

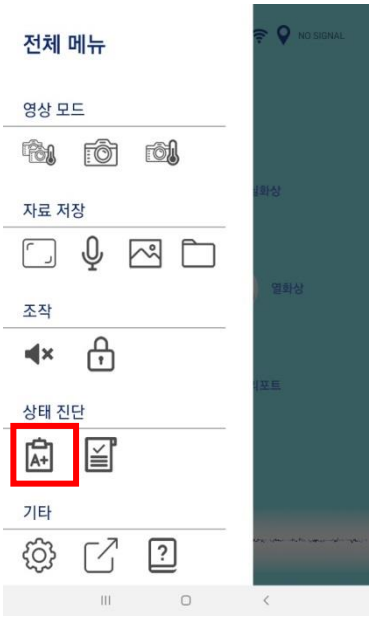

6.1.1) Open the main menu and tap the **Status** icon.

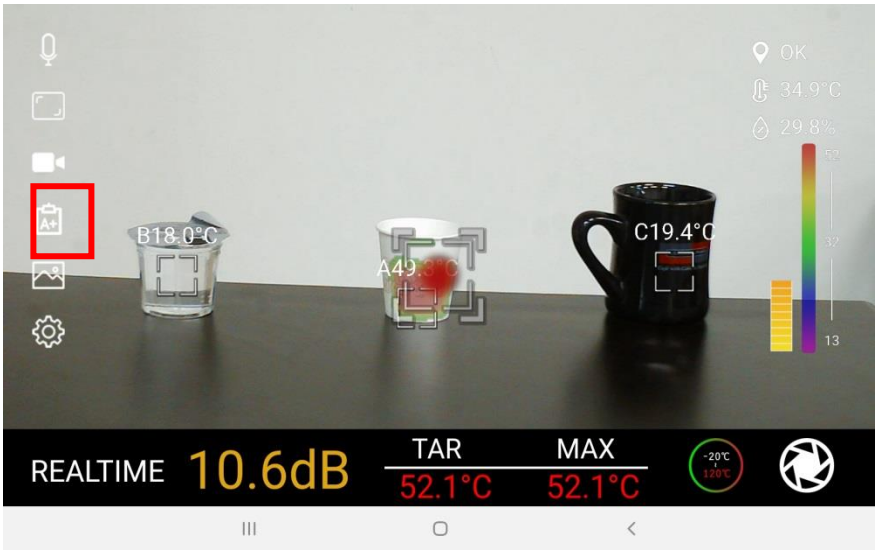

On the **Integrated Diagnosis Mode**, **Infrared Camera Mode**, or **Camera (Ultrasound) Mode** screen, tap the **Status** icon.

6.2) Integrated Diagnosis

6.2.1) Integrated Diagnosis Status

6.2.1.1) Import WAVE file.
6.2.1.2)Import image file.
6.2.1.3) Select your method of inspection (infrared): Three-phase Comparison Method or Temperature Pattern Method.
6.2.1.4) Enter the voltage type or select from the list.
6.2.1.5) Select the equipment type from the list.
6.2.1.6)Standard temperature based on the equipment type is automatically entered.
6.2.1.7) Temperature reference points are automatically entered once the image file is uploaded.
6.2.1.8)Select the material type from the list.
6.2.1.9) Select the defect type from the list.
6.2.1.10) Enter the distance or select from the list.

6.2.2) **Diagnosis Result** - Four Levels
MPL4: **Critical** / Immediate replacement required
MPL3: **Major** / Due for re-inspection within a week
MPL2: **Minor/Moderate** / Due for re-inspection within a month
MPL1: **Trivial** / Follow protocol

Each facility has its own reference temperature points for various defects. Temperature Pattern Method uses these temperature points to perform diagnosis. Three-Phase Comparison Method compares the temperature points at three different phases to perform diagnosis. With the X1, the user can adjust the temperature points depending on the environment. The user can also save the diagnosis result as a UDR file.

6.3) Ultrasound Diagnosis

6.3.1) Ultrasound Diagnosis Status

6.3.1.1) Import WAVE file.
6.3.1.2)Select the voltage type.
6.3.1.3)Select the equipment type.
6.3.1.4)Select the material type.
6.3.1.5)Select the defect type.
6.3.1.6)Select the distance.

6.3.2) Diagnosis Result - Six Levels

PL1: **Trivial** / Due for re-inspection within 3 years
PL2: **Minor** / Due for re-inspection within a year
PL3: **Moderate** / Due for re-inspection within 6 months
PL4: **Warning** / Due for re-inspection within 3 months
PL5: **Major** / Due for re-inspection within 30 days
PL6: **Critical** / Immediate replacement required or due for re-inspection within a week.

You can save the diagnosis result as a UDR file.

6.3) Ultrasound Diagnosis

6.3.1) Ultrasound Diagnosis Status

6.3.1.1) Import WAVE file.
6.3.1.2)Select the voltage type.
6.3.1.3)Select the equipment type.
6.3.1.4)Select the material type.
6.3.1.5)Select the defect type.
6.3.1.6)Select the distance.

6.3.2) Diagnosis Result - Six Levels

PL1: **Trivial** / Due for re-inspection within 3 years
PL2: **Minor** / Due for re-inspection within a year
PL3: **Moderate** / Due for re-inspection within 6 months
PL4: **Warning** / Due for re-inspection within 3 months
PL5: **Major** / Due for re-inspection within 30 days
PL6: **Critical** / Immediate replacement required or due for re-inspection within a week.

You can save the diagnosis result as a UDR file.

6.4) Infrared Diagnosis

6.4.1) Infrared Diagnosis Status

6.4.1.1) Import image file.
6.4.1.2) Select your method of inspection (infrared): Three-phase Comparison Method or Temperature Pattern Method.
6.4.1.3) Select the voltage type.
6.4.1.4)Select the equipment type.
6.4.1.5)Standard temperature based on the equipment type is automatically entered or you can choose to enter the temperature manually.
6.4.1.6)Temperature reference points are automatically entered once the image file is uploaded.

6.4.2) Diagnosis Result - Three Levels (Three-Phase Comparison Method)
TCL3: **Trivial** / Follow protocol
TCL2: **Warning** / Due for re-inspection within 3 months
TCL1: **Critical** / Immediate replacement is required

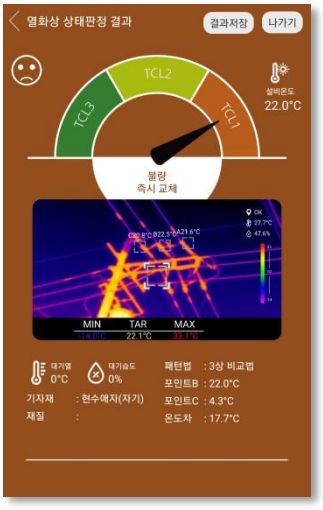

6.4.3) Diagnosis Result - Four Levels (Temperature Pattern Method)
TL4: **Trivial** / Follow protocol
TL3: **Potential Degradation** / Due for re-inspection within a month
TL2: **Potential Defect** / Due for re-inspection within a week
TL1: **Critical** / Immediate replacement required

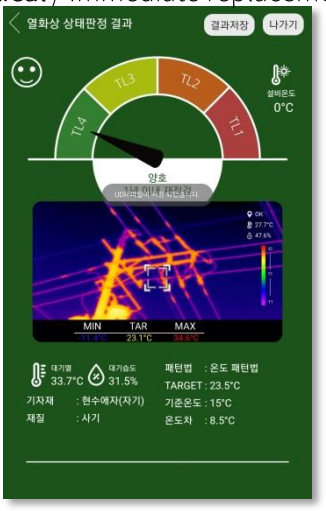

Each facility has its own reference temperature points for various defects. Temperature Pattern Method uses these temperature points to perform diagnosis. Three-Phase Comparison Method compares the temperature points at three different phases to perform diagnosis. With the X1, the user can adjust the temperature points depending on the environment. The user can also save the diagnosis result as a UDR file.

7. Creating a Report

7.1) Tap the **Create Report** icon on the main screen. Or open the main menu and tap the **Create Report** icon.

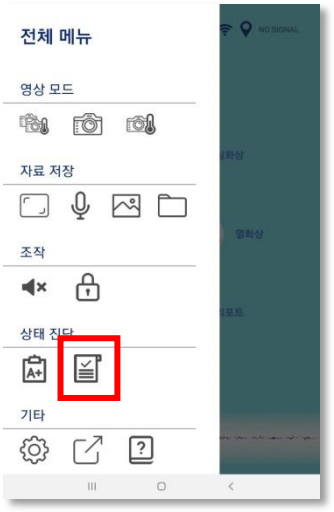

7.2) You can create a report for each mode (**Integrated Diagnosis**, **Ultrasound**, or **Infrared**) by tapping on the respective icons on the tab.
Create a Report Using the Diagnosis Result: Import UDR files to create your report.
Import Saved Reports: View and edit your saved reports.

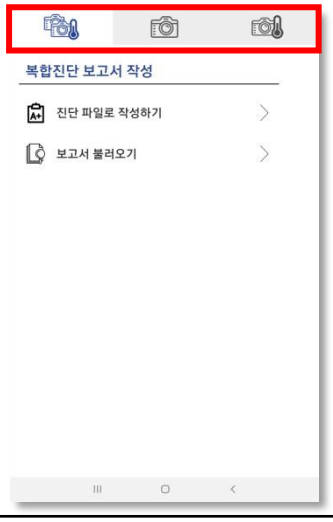

CHAPTER 3

7.3 Creating Your Report

7.3.1 Enter the date, DL line, and identification number.
7.3.2 Import **Equipment Type/ Defect Type** data from the diagnosis result.
7.3.3 Enter the weather condition.
7.3.4 Import **Temperature/Humidity** data from the diagnosis result.
7.3.5 Import image file from the **Gallery.**
7.3.6 Import **GPS** data from the diagnostic result.
7.3.7 Save your report and select the file format (jpg,pdf) you want to use.
* Imported data from the UDR file will be automatically entered.

8. Settings

8.1.1 Open the main menu and tap the **Settings** icon.

8.1.2 You can access the **Settings** menu for each mode (**Integrated Diagnosis, Ultrasound**, or **Infrared)** by tapping on the respective icons on the tab.

8.2 Default Settings

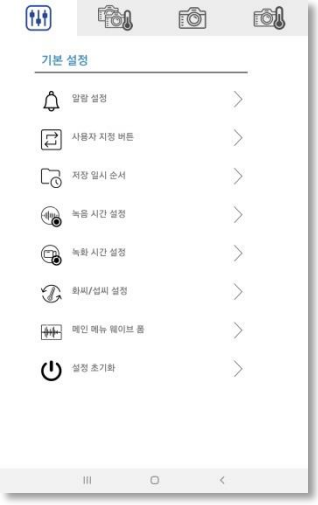

8.2.1 Tap **Alarm Settings**

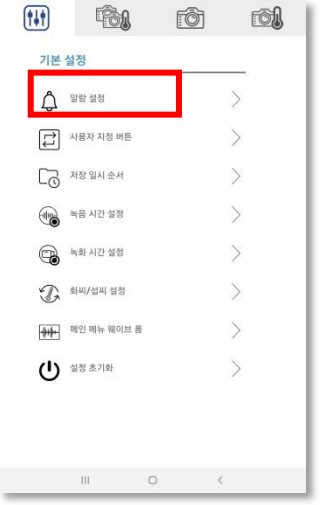

8.2.1.1 Alarm Settings Menu

8.2.1.2 **Alarm Settings Menu**
8.2.1.2.1 Tap **Activate Alarm** to enable or disable your alarm.
8.2.1.2.2 Tap **Alarm Activation Default dB Level** to set the default dB level. Alarm will sound when the signal reaches the dB level.
8.2.1.2.3 Tap **Activation Time** to set the activation time for your alarm. If an ultrasound signal above the default dB level is detected for a certain amount of time (the activation time), alarm will sound.
8.2.1.2.4 Tap **Alarm Duration** to set the time for alarm duration.
8.2.1.2.5 Tap **Vibration Mode** to activate vibration mode.
8.2.1.2.6 Tap **Sound Mode** to activate sound mode.
8.2.1.2.7 Tap **Alarm Icon** to display the alarm icon on the screen during activation.

8.2.2 Customize your Main Menu

8.2.2.1) Tap **Customize Main Menu.**

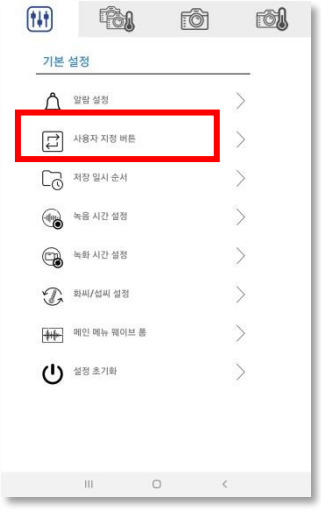

8.2.2.2) You can select items to add to your main menu.

On the left are the icons currently in use. On the right are all the available icons that can be added to the menu.

8.2.2.3) Tap and hold an icon from the All icons screen, and then drag it to the main menu. The selected icons will be shown on the main screen.

8.2.3 Setting Your Date Format

1) Tap **Date and Time Format Settings**.

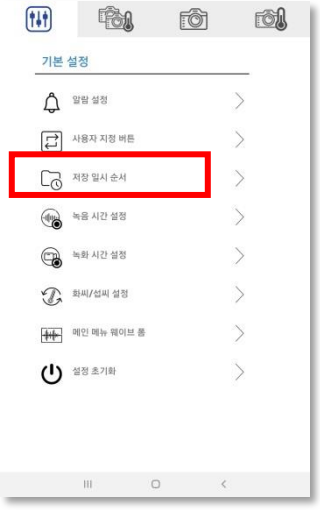

2) Select your preferred format and tap **Save**.

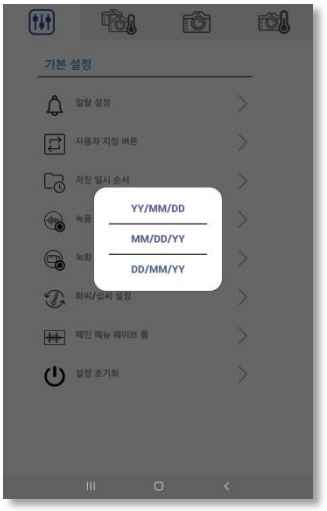

8.2.4 Setting Your Audio Recording Time

1) Tap **Audio Recording Time Settings.**

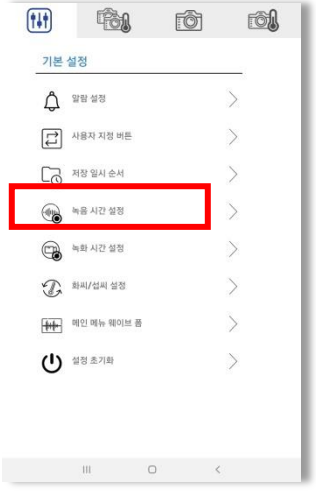

2) Select the recording time for your ultrasound recordings and tap **Save**.

8.2.5 Setting Your Video Recording Time

1) Tap **Video Recording Time Settings**

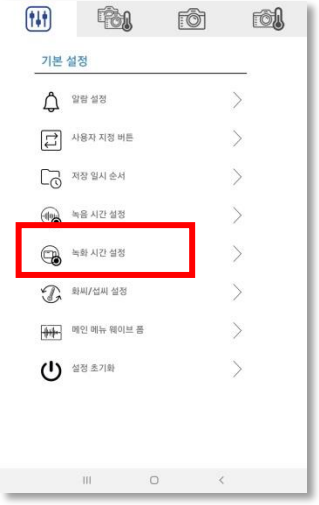

2) Select the recording time for your video recordings (Integrated Diagnosis Mode, Camera Mode, and Infrared Camera Mode) and tap **Save**.

8.2.6 Setting Your Temperature Scale
1) Tap **Temperature Scale Settings.**

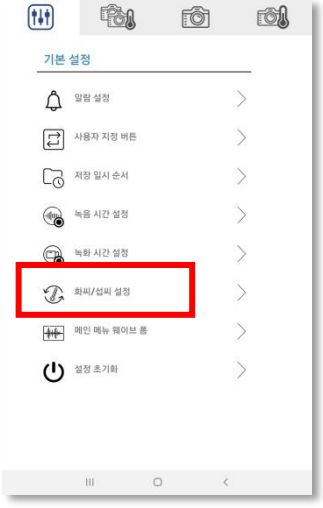

2) Select your preferred temperature scale and tap **Save.**

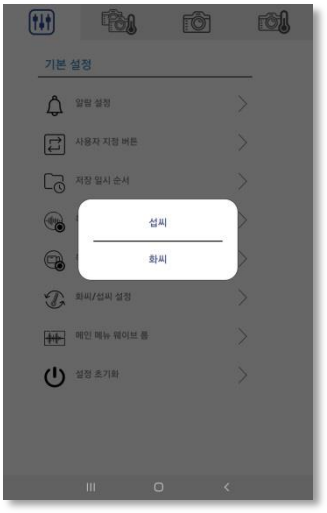

8.2.7 Setting Your Main Menu Waveform

1) Tap **Main Menu Waveform Settings.**

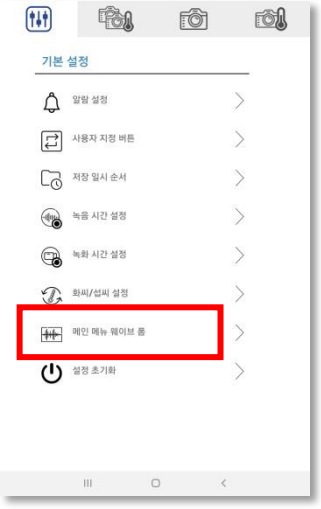

2) Tap to activate or deactivate the waveform generator at the bottom of the main screen.

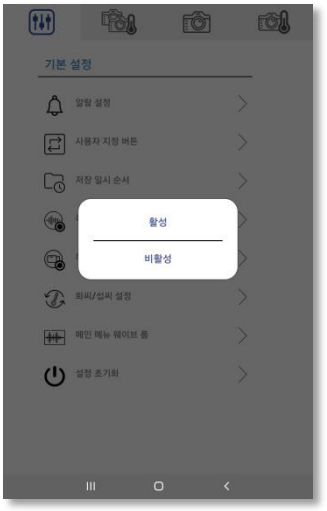

8.2.8 Reset Settings

1) Tap **Rest to Default Settings**

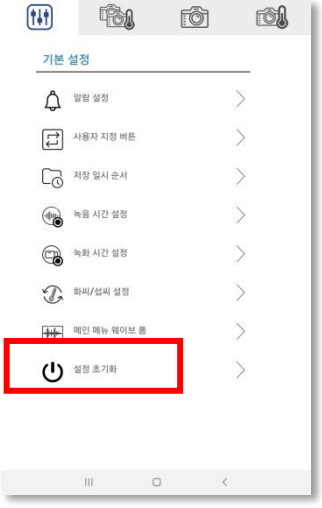

2) Tap **Yes** to reset your settings to default. Tap **No** to cancel.

8.3 Integrated Camera Settings

8.3.1 Tap the **Integrated Diagnosis** icon on the table to synchronize your settings with the **Integrated Diagnosis Mode** settings.

8.3.2 Adjust your **Temperature Range Settings.** Check the boxes to automatically set the temperature range.

8.3.3 Adjust your **Distance Settings** (Distance from the target [Default setting: 12.5m]).

8.3.4 Adjust your **Color Palette Settings.**

- Select a color palette for the infrared image: Rainbow/Amber/White. (Select an appropriate palette depending on your environment.)

8.3.5 Adjust your **Offset Settings.**

Adjust the temperature values depending on your environment.

8.3.6 Adjust your **Temperature Mode Settings.**

- Default Range: -20°C ~ 120°C
- Extended Range: 100°C ~ 600°C

8.4 Ultrasound Settings

8.4.1 Tap the **Ultrasound** icon on the tab to synchronize your settings with the **Camera (Ultrasound) Mode** settings.

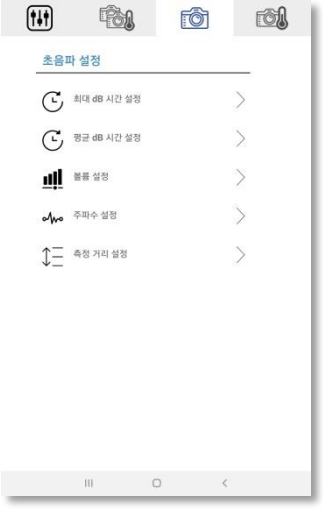

8.4.2 Set your Maximum dB Reference Time Point.

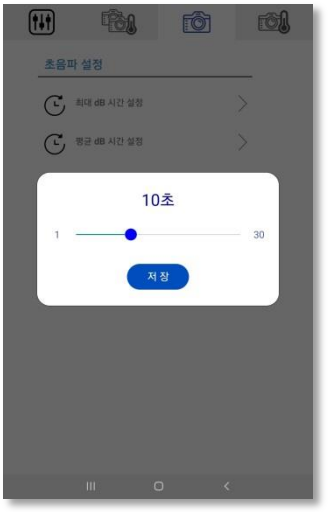

8.4.3 Set your Average dB Reference Time Point.

8.4.4 Adjust your **Volume Settings.**

8.4.5 Adjust your **Frequency Settings.**

8.4.6 Adjust your **Distance Settings** (Distance from the target [Default setting: 12.5m]).

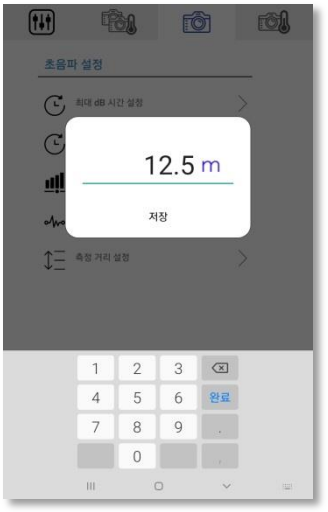

8.5 Infrared Settings

8.5.1 Tap the **Infrared** icon (fourth icon) on the tab to synchronize your settings with the **Infrared Camera Mode** settings.

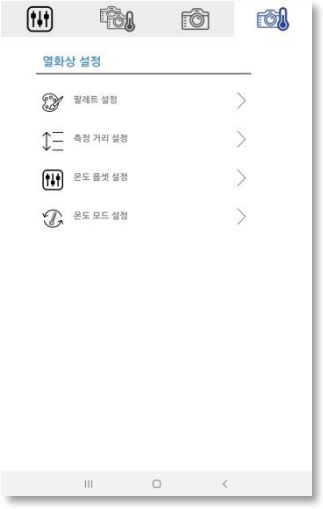

8.5.2 Adjust your **Color Palette Settings.**

- Select a color palette for the infrared image: Rainbow/Amber/White. (Select an appropriate palette depending on your environment.)

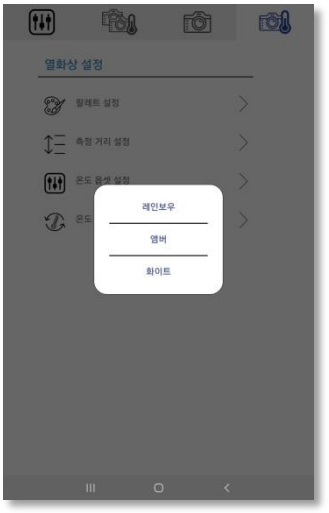

8.5.3 Adjust your **Distance Settings** (Distance from the target [Default setting: 12.5m]).

8.5.4 Adjust your **Offset Settings.**

Adjust the temperature values depending on your environment.

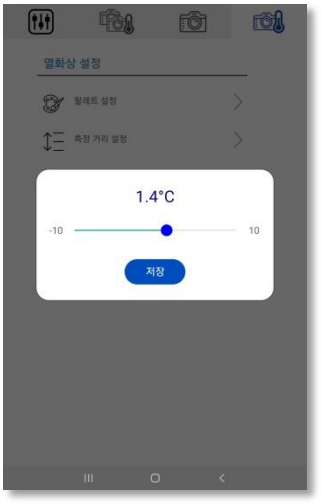

8.5.5 Adjust your Temperature Mode Settings.

- Default Range: -20°C ~ 120°C
- Extended Range: 100°C ~ 600°C

9. Data Sharing

9.1 On the menu, tap **Data Sharing.**

9.2 From the list of files, select the file you want to share.

9.3 Choose how you want to share your file.

CHAPTER 3

10. Warning Message

Device needs an update. Contact the manufacturer.

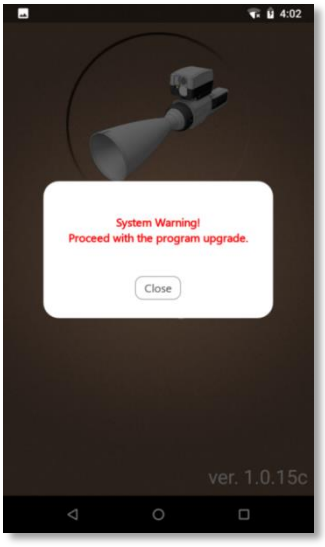

CHAPTER 4

INSPECO X1

Product Information

CHAPTER 4

Product Information

1. ERROR Messages
2. Important Safety Instructions
   - 2.1 Device
   - 2.2 Power Supply
   - 2.3 Environment
3. Copyright
4. Troubleshooting
5. Customer Service & Warranty

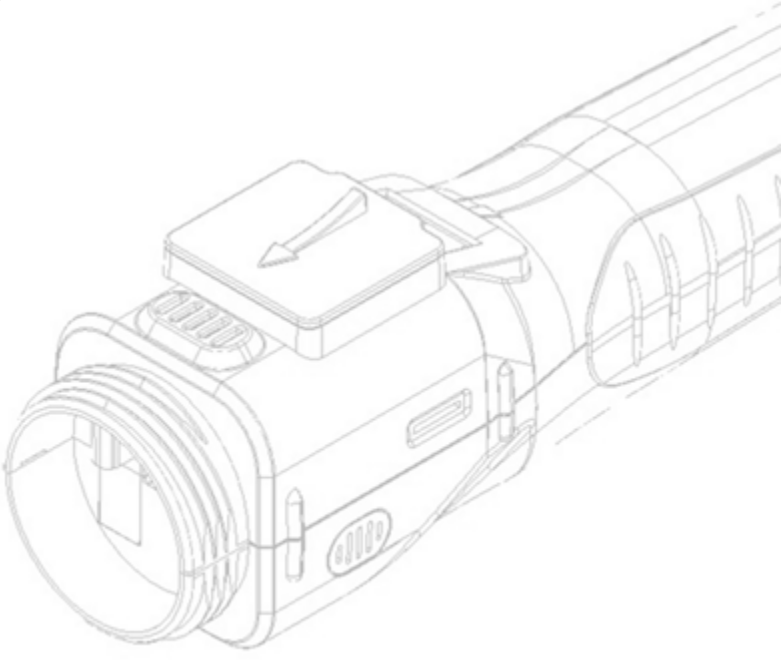

CHAPTER 4

1. Error Message

1.1) ERROR MESSAGE: LOW BATTERY

1) Your battery is low.

1.2) ERROR MESSAGE: RECHARGE BATTERY

1) Your battery is low. Recharge the battery.

1.3) ERROR MESSAGE: CHECK SD CARD

1) Insert the SD card and reboot the device.
2) Once the SD card is removed, it must be inserted back before the device is turned on.

1.4) ERROR MESSAGE: CANNOT SAVE FILE

1) Your device failed to save WAV file.
2) Reformat or replace the SD card.

1.5) ERROR MESSAGE: CANNOT CREATE FILE

1) Your device failed to create a new file.
2) Reformat or replace the SD card.

1-6. ERROR MESSAGE: E2PROM ERROR

1) Something is wrong with the system variation setting.
2) Contact the manufacturer.

CHAPTER 4

1.7) ERROT MESSAGE: UPDATE REQUIRED

1) Contact the manufacturer.

1.8) Contact the manufacturer if you encounter any difficulties. Do not attempt to service the device yourself. Doing so may cause damage or injury.

2. Important Safety Instructions

To reduce the risk of damage or injury, read the following safety instructions in their entirety before using the device. Heed all warnings and precautions. Failure to do so may cause damage or injury.

2.1) Device

1. Failure to observe the following precautions could result in serious damage to the device.
2. Do not drop or subject the device to strong physical force. Failure to observe this precaution could result in serious damage to the device.
3. When the same screen is displayed for an extended period of time, an afterimage may occur.
4. Remove the power adapter before moving the device.
5. Do not leave the device inside a vehicle for an extended periodic in hot or cold conditions. Before turning the power on, allow the device to cool or heat up.
6. Do not expose the device to water or other liquid. If exposed, wipe gently with a soft, dry cloth. Do not attempt to turn on the device. Contact INSPECO Service Center for inspection.
7. Store the device in a cool, dry area. Do not expose the device to moisture. Be careful to prevent dust from entering the device.
8. Avoid exposing the device to excess heat and direct sunlight.
9. Keep the device away from sources of strong magnetic fields.
10. Do not disassemble, modify, or repair the device. The device should be repaired only by a qualified technician.
11. Contact the manufacturer for repairs. Do not disassemble, modify, or repair the device. Failure to observe this precaution may invalidate your warranty.
12. Be careful to prevent dust or other foreign matters (metal, coin, hair pin, etc.) from entering the device. Dust or other foreign matters may cause damage to the device.
13. If the device is exposed to dust or other foreign matter, make sure to remove the power adapter and wipe gently with a soft, dry cloth.
14. Do not place heavy objects on top of the device.
15. Do not bend, drop, or subject the device to strong physical force.
16. Do not subject the device to impact while driving. This could result in damage to the device, charging cable, and connector.
17. The audio jack is intended for earphones and headsets only. Do not attempt to connect any other devices.
18. Do not use chemicals to clean the device in order to avoid corrosion

2.2) Power Supply

1) Failure to observe the following precautions could result in fire, overheating, electrocution, or malfunction.
2) Do not use a damaged charger or power adapter.
3) Do not bend or place heavy objects on top of the charger and power adapter.
4) Do not handle the charger and power adapter with wet hands.
5) Make sure that the charger and power adaptor is fully plugged when charging.
6) Unplug the charger and power adaptor during thunderstorms.
7) Do not charge the battery near inflammable materials.

8) Only use the charger and power adaptor provided with the device.
9) Unplug the charger and power adapter when charging is complete.
10) Do not handle the device with wet hands when charging.
11) If dust or other foreign matter enters the device, unplug the charger and power adapter. Turn off the device immediately.
12) If there are any unusual sounds or smells coming from the device or power adapter, unplug the power adapter. Turn off the device immediately.
13) Do not use an unauthorized charger or power adapter to charge the device. Failure to observe this precaution could result in damage the device and invalidate your warranty.

2.3) Environment

1. Be careful when using the device in the presence of other electronic devices.
2. Electromagnetic waves emanating from the device could interfere with other devices.
3. Do not use the device in areas with explosive hazards.
4. Turn off the device and follow all laws and regulations while in areas with explosive hazards.
5. Turn off the device when boarding a plane.
6. Failure to observe the following precautions could result in the loss of data, malfunction, damage or injury.
7. In order to avoid losing data, make a backup copy of the data contained in the device regularly. Data could be damaged or lost during repair or due to negligence.
8. INSPECO will not be held liable for any damages resulting from the loss of data. Make a backup of all your important data.
9. Operate the device in a safe environment.
10. Do not operate the device while driving.
11. Do not use earphones/headphones while operating a motor vehicle. Using earphones/headphones with both ears covered while driving is not recommended and may be illegal in some jurisdictions. Always drive safely, avoid distractions, and follow local laws.
12. Use of earbuds will impair your ability to hear other sounds. Do not turn up the volume so high that you can't hear what's around you.
13. Refrain from using the device during thunderstorms.
14. Should you experience ringing in the ears, lower the volume or cease using earphones/headphones.
15. Using earphones/headphones at high volumes for an extended period of time could result in permanent hearing damage. It is recommended to keep the volume level low for your safety.
16. Use caution to avoid your earphones/headphones from getting stuck between objects.
17. Refrain from using earphones/headphones for an extended period of time to prevent hearing damage.
18. Only use the accessories provided with the device or otherwise authorized by the manufacturer.

3. Copyright

~~3.1) All rights are reserved by INSPECO. No parts of the manual or software included with the dev~~ice may be reproduced, transmitted, transcribed, stored in a retrieval system, or translated into any language in any form, by any means, without INSPECO's prior written consent. INSPECO will not be held liable for any damages resulting from copyright infringements. Violators shall be held liable.

4. Trouble Shooting

4.1) Your device does not turn on

1) Out of Battery: Make sure that the power cable is plugged into an outlet and connector. Charge the device for 10 minutes or more before turning it on.
2) Main Switch: Turn on the main switch on the back of the instrument.

3) If the power still does not turn on, contact the manufacturer.

4.2) The battery does not charge

1) Check the indicator (green on red light) on the power adaptor.
2) If the indicator is on but the power does not turn on, contact the manufacturer.

4.3) Your device does not pick up any sound signals

1) Create a noise near the receiver and check for signals.
2) If the device is able to pick up the signal, check the audio jack for damages.
3) If the device is unable to pick up the signal, contact the manufacturer.

4.4) Noise can be heard but there is no signal

1) Replace the signal cable and check for signals. An extra signal cable is provided with the device.

4.5) Your device cannot read the SD card

1) Reformat the SD card (32GB or less) using FAT32 format.
2) Turn off the power and insert the SD card. Then turn the device back on.

4.6) Recording does not work

1) Refer to 4.5 (Your device cannot read the SD card).
2) If the recording is still not working, replace the SD card.

4.7) Rattling sound can be heard from the interior or detector

1) Contact the manufacturer.

5. Customer Service

5.1) Contact the manufacturer in the case of damage.
5.2) Securely package the device to prevent damage during transit and send it to the manufacturer.
5.3) Make sure to provide your name, contact info, and symptoms.
5.4) Consult with the manufacturer for details regarding costs and regulations.

All rights are reserved by INSPECO. No parts of the manual or software included with the device may be reproduced, transmitted, transcribed, stored in a retrieval system, or translated into any language in any form, by any means, without INSPECO's prior written consent.

Warranty

Product: Diagnostic Equipment (Ultrasound/Infrared)

Product Name: INSPECO X1

OEM: INSPECO

Made in Korea

Warranty Number:

Warranty

1. This INSPECO X1 product, as supplied and distributed by INSPECO and delivered to the original customer, is warranted by INSPECO against manufacturing defects in materials and workmanship for a period of 1 year. INSPECO will repair or replace this product at no charge if the product is found to be defective during the limited warranty period.

2. INSPECO is not responsible for damages arising from failure to follow instructions relating to INSPECO X1's use. This warranty does not apply to:

A. Damage caused by neglect and misapplication;
B. Damage caused by incorrect electrical voltage and improper or unauthorized repair;
C. Damage caused by accidents (dropping the device or subjecting the device to physical force)subsequent to the delivery of the product to its user;
D. Damage caused by fire, water, lightning or other acts of nature;
E. Damage caused by improper storage and misuse.

3. This warranty applies only to the hardware products (main body, infrared camera, detector) of INSPECO X1 manufactured by INSPECO. This warranty does not apply to any accessories provided with the product.

[INSPECO Service Center]

Homepage: www.inspeco.co.kr
E-mail: inspeco@inspeco.co.kr
Address: 425-80, Gyeongbokdae-ro, Jinjeop-eup, Namyangju-si, Gyeonggi-do, Republic of Korea

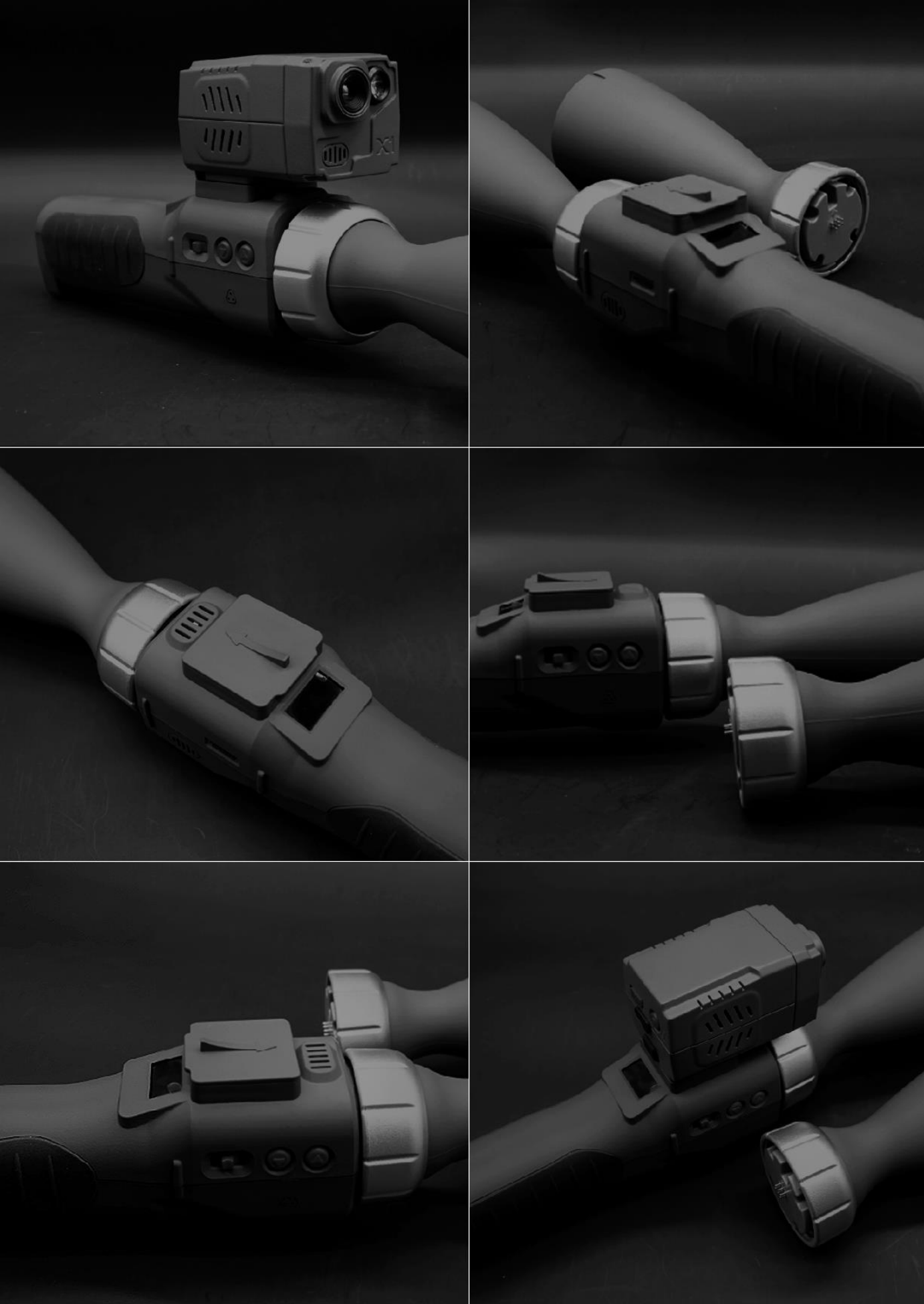

INSPECO

www.inspeco.co.kr