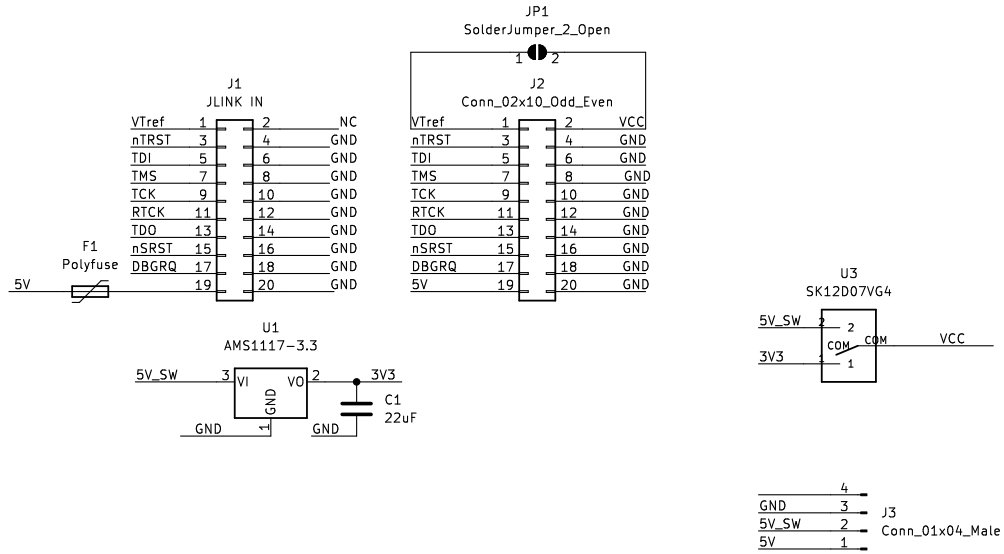
JP1
SolderJumper_2_Open
1
2
J1
JLINK IN
VTref 1
nTRST 3
TDI 5
TMS 7
TCK 9
RTCK 11
TDO 13
nSRST 15
DBGRQ 17
19
2 NC
4 GND
6 GND
8 GND
10 GND
12 GND
14 GND
16 GND
18 GND
20 GND
J2
Conn_02x10_Odd_Even
VTref 1
nTRST 3
TDI 5
TMS 7
TCK 9
RTCK 11
TDO 13
nSRST 15
DBGRQ 17
5V 19
2 VCC
4 GND
6 GND
8 GND
10 GND
12 GND
14 GND
16 GND
18 GND
20 GND
F1
Polyfuse
5V
U1
AMS1117-3.3
5V_SW 3
VI
VO 2
GND
1
3V3
C1
22uF
GND
GND
U3
SK12D07VG4
5V_SW 2
3V3 1
COM
2
1
COM
VCC
4
GND 3
5V_SW 2
5V 1
J3
Conn_01x04_Male