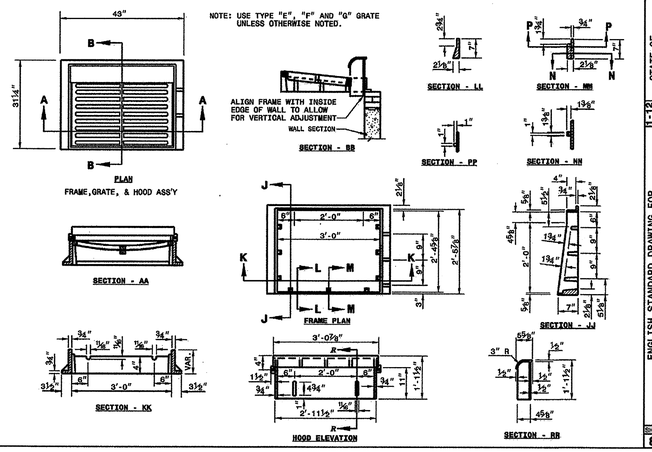

STATE OF NORTH CAROLINA DEPT. OF TRANSPORTATION DIVISION OF HIGHWAYS RALEIGH, N.C.

1-12

ENGLISH STANDARD DRAWING FOR **FRAME, GRATES, AND HOOD** FOR USE ON STANDARD CATCH BASIN

SHEET 1 OF 2 **840.03**

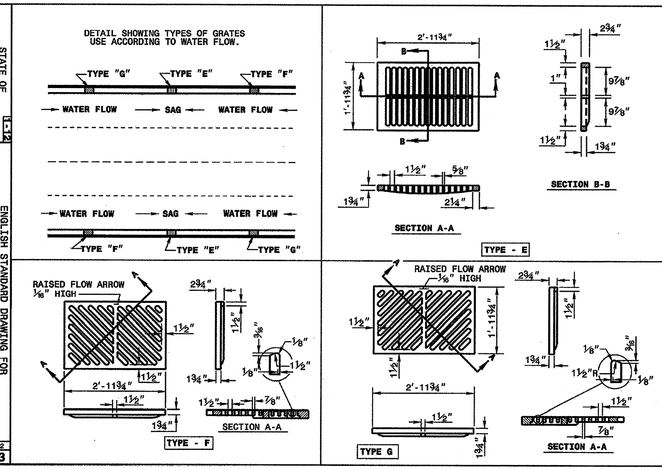

STATE OF NORTH CAROLINA DEPT. OF TRANSPORTATION DIVISION OF HIGHWAYS RALEIGH, N.C.

1-12

ENGLISH STANDARD DRAWING FOR **FRAME, GRATES, AND HOOD** FOR USE ON STANDARD CATCH BASIN

SHEET 1 OF 2 **840.03** | SHEET 2 OF 2 **840.03**

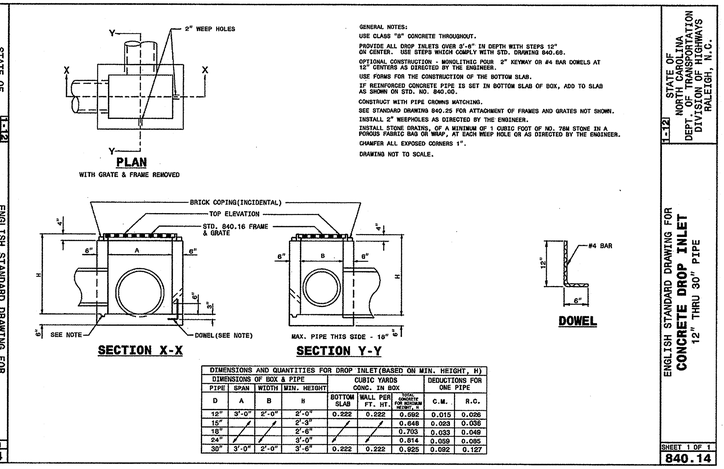

GENERAL NOTES:
USE CLASS "B" CONCRETE THROUGHOUT.
PROVIDE ALL DROP INLETS OVER 3'-6" IN DEPTH WITH STEPS 12" ON CENTER. USE STEPS WHICH COMPLY WITH STD. DRAWING 840.65.
OPTIONAL CONSTRUCTION - MONOLITHIC POUR. 2" KEYWAY OR #4 BAR DOWELS AT 12" CENTERS AS DIRECTED BY THE ENGINEER.
USE FORMS FOR THE CONSTRUCTION OF THE BOTTOM SLAB.
IF REINFORCED CONCRETE PIPE IS SET IN BOTTOM SLAB OF BOX, ADD TO SLAB AS SHOWN ON STD. NO. 840.00.
CONSTRUCT WITH PIPE CROWNS MATCHING.
SEE STANDARD DRAWING 840.25 FOR ATTACHMENT OF FRAMES AND GRATES NOT SHOWN.
INSTALL 2" WEEPHOLES AS DIRECTED BY THE ENGINEER.
INSTALL STONE GRATES, OF A MINIMUM OF 1 CUBIC FOOT OF NO. 78M STONE IN A POROUS FABRIC BAG OR WRAP, AT EACH WEEP HOLE OR AS DIRECTED BY THE ENGINEER.
CHAMFER ALL EXPOSED CORNERS 1".
DRAWING NOT TO SCALE.

DIMENSIONS AND QUANTITIES FOR DROP INLET(BASED ON MIN. HEIGHT, H)

DIMENSIONS OF BOX & PIPE				CUBIC YARDS CONC. IN BOX			DEDUCTIONS FOR ONE PIPE	
PIPE	SPAN	WIDTH	MIN. HEIGHT	BOTTOM SLAB	WALL PER FT. HT.	TOTAL CONCRETE (INCLUDES BOTTOM SLAB OF BOX)	C.M.	R.C.
D	A	B	H					
12"	3'-0"	2'-0"	2'-0"	0.222	0.222	0.692	0.015	0.026
15"	/	/	2'-3"	/	/	0.648	0.033	0.035
18"	/	/	2'-6"	/	/	0.705	0.033	0.049
24*	/	/	3'-0"	/	/	0.814	0.059	0.085
30"	3'-0"	2'-0"	3'-6"	0.222	0.222	0.925	0.092	0.127

STATE OF NORTH CAROLINA DEPT. OF TRANSPORTATION DIVISION OF HIGHWAYS RALEIGH, N.C.

1-12

ENGLISH STANDARD DRAWING FOR **CONCRETE DROP INLET** 12" THRU 30" PIPE

SHEET 1 OF 1 **840.14**

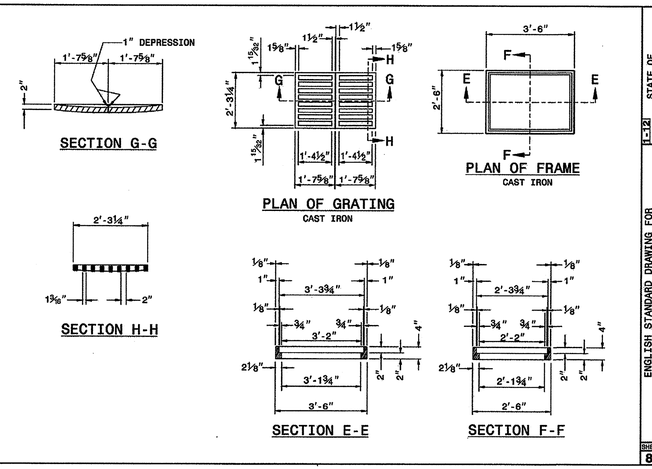

STATE OF NORTH CAROLINA DEPT. OF TRANSPORTATION DIVISION OF HIGHWAYS RALEIGH, N.C.

1-12

ENGLISH STANDARD DRAWING FOR **FRAME AND GRATES** DWG.S 840.14 AND 840.15

ENGLISH STANDARD DRAWING FOR **DROP INLET FRAME AND GRATES** FOR USE WITH STD. DWG.S 840.14 AND 840.15

SHEET 1 OF 1 **840.16**

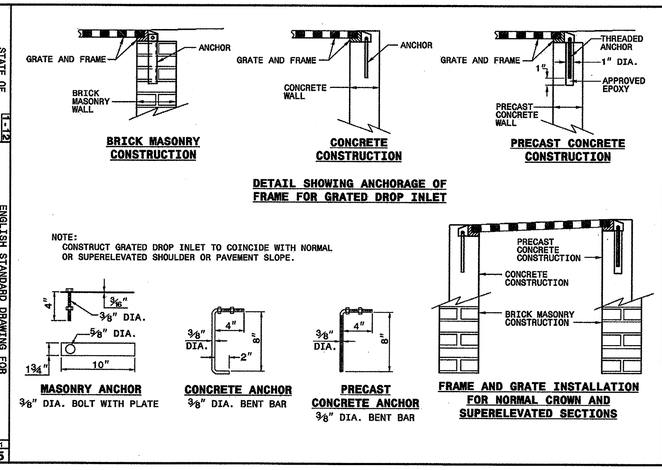

STATE OF NORTH CAROLINA DEPT. OF TRANSPORTATION DIVISION OF HIGHWAYS RALEIGH, N.C.

1-12

ENGLISH STANDARD DRAWING FOR **ANCHORAGE FOR FRAMES** BRICK/CONCRETE/PRECAST CONCRETE

SHEET 1 OF 1 **840.25**

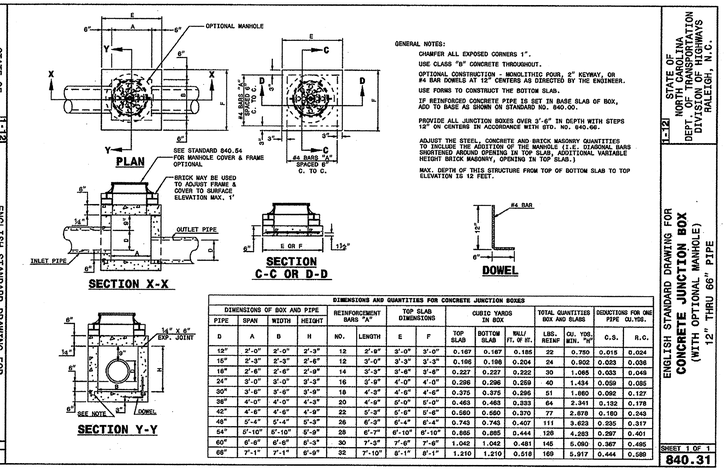

GENERAL NOTES:
CHAMFER ALL EXPOSED CORNERS 1".
USE CLASS "B" CONCRETE THROUGHOUT.
OPTIONAL CONSTRUCTION - MONOLITHIC POUR, 2" KEYWAY, OR #4 BAR DOWELS AT 12" CENTERS AS DIRECTED BY THE ENGINEER.
USE FORMS TO CONSTRUCT THE BOTTOM SLAB.
IF REINFORCED CONCRETE PIPE IS SET IN BASE SLAB OF BOX, ADD TO BASE AS SHOWN ON STANDARD NO. 840.00.
PROVIDE ALL JUNCTION BOXES OVER 3'-6" IN DEPTH WITH STEPS 12" ON CENTERS IN ACCORDANCE WITH STD. NO. 840.65.
ADJUST THE STEEL, CONCRETE AND BRICK MASONRY QUANTITIES TO INCLUDE THE ADDITION OF THE MANHOLE (I.E. DIAGONAL BARS SHORTENED AROUND OPENING IN TOP SLAB, ADDITIONAL VARIABLE HEIGHT BRICK MASONRY, OPENING IN TOP SLAB.)
MAX. DEPTH OF THIS STRUCTURE FROM TOP OF BOTTOM SLAB TO TOP ELEVATION IS 12 FEET.

DIMENSIONS AND QUANTITIES FOR CONCRETE JUNCTION BOXES

DIMENSIONS OF BOX AND PIPE				REINFORCEMENT BARS "A"		TOP SLAB DIMENSIONS		CUBIC YARDS IN BOX			TOTAL QUANTITIES BOX AND SLABS		DEDUCTIONS FOR ONE PIPE CU.YDS.	
PIPE	SPAN	WIDTH	HEIGHT	NO.	LENGTH	E	F	TOP SLAB	BOTTOM SLAB	WALL/ FT. OF HT.	LBS. REINF	CU. YDS. MIN. "H"	C.S.	R.C.
D	A	B	H											
12"	2'-0"	2'-0"	2'-3"	12	2'-9"	3'-0"	3'-0"	0.167	0.167	0.185	22	0.750	0.015	0.024
15"	2'-3"	2'-3"	2'-6"	12	3'-0"	3'-3"	3'-3"	0.195	0.195	0.204	24	0.902	0.033	0.036
18"	2'-6"	2'-6"	2'-9"	14	3'-3"	3'-6"	3'-6"	0.227	0.227	0.222	30	1.065	0.033	0.049
24"	3'-0"	3'-0"	3'-3"	16	3'-9"	4'-0"	4'-0"	0.296	0.296	0.259	40	1.454	0.059	0.085
30"	3'-6"	3'-6"	3'-9"	18	4'-3"	4'-6"	4'-6"	0.375	0.375	0.296	51	1.880	0.092	0.127
36"	4'-0"	4'-0"	4'-3"	20	4'-9"	5'-0"	5'-0"	0.463	0.463	0.333	64	2.341	0.132	0.178
42"	4'-6"	4'-6"	4'-9"	22	5'-3"	5'-6"	5'-6"	0.560	0.560	0.370	77	2.878	0.180	0.243
48"	5'-4"	5'-4"	5'-3"	26	6'-3"	6'-4"	6'-4"	0.743	0.743	0.407	111	3.623	0.235	0.317
54"	6'-10"	6'-10"	6'-9"	28	6'-7"	6'-10"	6'-10"	0.886	0.885	0.444	128	4.283	0.297	0.401
60"	6'-8"	6'-8"	6'-5"	30	7'-3"	7'-6"	7'-6"	1.042	1.042	0.481	145	5.090	0.367	0.495
66"	7'-1"	7'-1"	6'-8"	32	7'-10"	8'-1"	8'-1"	1.210	1.210	0.518	169	5.917	0.444	0.590

STATE OF NORTH CAROLINA DEPT. OF TRANSPORTATION DIVISION OF HIGHWAYS RALEIGH, N.C.

1-12

ENGLISH STANDARD DRAWING FOR **CONCRETE JUNCTION BOX** (WITH OPTIONAL MANHOLE) 12" THRU 66" PIPE

SHEET 1 OF 1 **840.31**

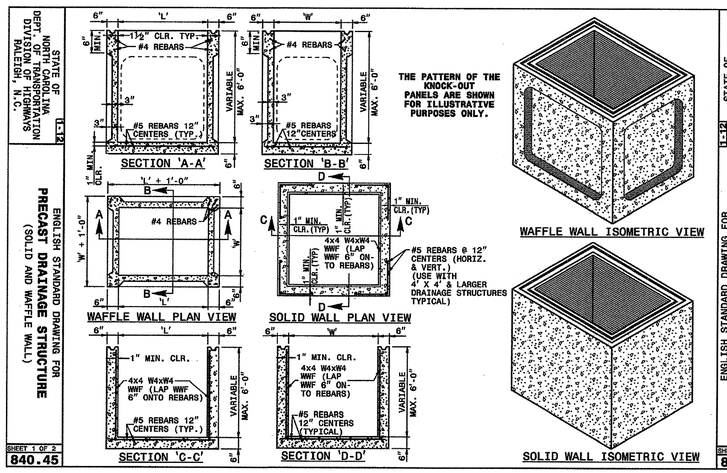

STATE OF NORTH CAROLINA DEPT. OF TRANSPORTATION DIVISION OF HIGHWAYS RALEIGH, N.C.

1-12

ENGLISH STANDARD DRAWING FOR **PRECAST DRAINAGE STRUCTURE** (SOLID AND WAFFLE WALL)

SHEET 1 OF 2 **840.45**

GENERAL NOTES:

* THIS PRECAST BOX MAY BE USED FOR THE FOLLOWING STANDARDS: 840.01, 840.02, 840.04, 840.05, 840.11, 840.12, 840.14, 840.15, 840.17, 840.18, 840.19, 840.26, 840.27, 840.28, 840.31, 840.32 AND 840.41.
* INSTALL PRECAST DRAINAGE STRUCTURES AND PAY FOR IN ACCORDANCE WITH SPECIFICATION SECTION 840.
* DO NOT PLACE PRECAST DRAINAGE STRUCTURES UNDER TRAFFIC OR WHERE TRAFFIC WILL BE DETOURED.
* USE 4000 PSI CONCRETE.
* PROVIDE ALL REINFORCING STEEL WHICH MEETS ASTM A615 FOR GRADE 60 AND WELDED WIRE FABRIC CONFORMING TO ASTM A185.
* LIMIT MAXIMUM DEPTH TO TOP OF BOTTOM SLAB FOR WAFFLE WALL STRUCTURE TO 10'-0"; LIMIT SOLID WALL STRUCTURE TO 15'-0".
* PLACE LIFT HOLES OR PINS IN ACCORDANCE WITH OSHA STANDARD 1926.704.
* CUT OR FORM OPENINGS FOR PIPE TO PROVIDE REQUIRED SIZE AND LOCATION. ORIENT WAFFLE WALL STRUCTURES SO THAT PIPES ENTER THROUGH THE KNOCKOUT/WAFFLE PANELS ONLY. PIPES MAY ENTER THROUGH THE CORNERS OF SOLID WALL BOXES IF A MINIMUM OF 6" OF WALL IS PROVIDED ABOVE THE HOLE.
* ALL ELEMENTS PRECAST TO MEET ASTM C913.
* FRAME AND GRATE HEIGHT MAY BE ADJUSTED WITH CONCRETE OR BRICK IN ACCORDANCE WITH STANDARD 840.25.
* PROVIDE PRECAST STRUCTURES OVER 4'-0" IN DEPTH WITH STEPS AS DIRECTED BY THE ENGINEER.
* WELDED WIRE FABRIC MAY BE SUBSTITUTED FOR REBAR AS LONG AS THE SAME AREA OF STEEL IS PROVIDED.
* SEAL JOINTS WITH A FLEXIBLE BUTYL RUBBER BASE CONFORMING TO FEDERAL SPECIFICATION SS-S-21A, AASHTO M-198, TYPE B - BUTYL RUBBER.
* LIMIT MAXIMUM STRUCTURE SIZE TO INSIDE CLEAR DIMENSIONS OF 5'-0" X 5'-0".
* THE OUTSIDE PIPE DIAMETER PLUS 2" OR THE OPENING REQUIRED FOR FRAME AND GRATE IS THE MINIMUM STRUCTURE SIZE WHICHEVER IS GREATER.
* USE MANHOLE FRAME AND COVER AS INDICATED ON THE PLANS. REINFORCE OPENING AS SHOWN ON THIS SHEET.

STATE OF NORTH CAROLINA DEPT. OF TRANSPORTATION DIVISION OF HIGHWAYS RALEIGH, N.C.

1-12

ENGLISH STANDARD DRAWING FOR **PRECAST DRAINAGE STRUCTURE** (GENERAL NOTES AND DETAILS)

SHEET 2 OF 2 **840.45**

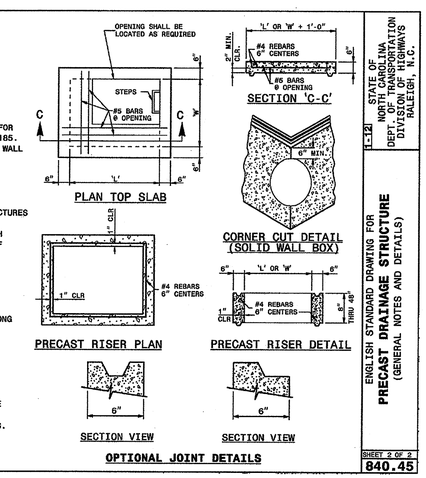

STATE OF NORTH CAROLINA DEPT. OF TRANSPORTATION DIVISION OF HIGHWAYS RALEIGH, N.C.

1-12

ENGLISH STANDARD DRAWING FOR **PRECAST DRAINAGE STRUCTURE** (GENERAL NOTES AND DETAILS)

SHEET 2 OF 2 **840.45**

S-5-11

UTILITY INSTALLATIONS AND OTHER PUBLIC FACILITIES, INCLUDING SIDEWALKS AND HANDICAP RAMPS ARE TO BE CONSTRUCTED ON ALL STREETS AS SPECIFIED BY CITY CODE. THESE FACILITIES HAVE BEEN APPROVED BY THE CITY OF RALEIGH AND SHALL BE SO INSTALLED UNLESS A CHANGE IS AUTHORIZED BY WRITTEN APPROVAL. PUBLIC SANITARY SEWER EASEMENTS ARE TO BE RECORDED PRIOR TO FINAL ACCEPTANCE.

SIGNATURE:
TRANSPORTATION SERVICES: N/A
PUBLIC UTILITIES: N/A
CONSERVATION ENGINEER: SPL 10/3/11
PLANNING: N/A

ALL CONSTRUCTION TO BE IN ACCORDANCE WITH ALL CITY OF RALEIGH AND/OR NCDOT STANDARDS AND SPECIFICATIONS.

No.	REVISIONS	DATE	BY
1	CITY OF RALEIGH 1ST REVIEW COMMENTS	9/21/11	WJB

Kimley-Horn and Associates, Inc.
333 FAYETTEVILLE STREET, SUITE 600, RALEIGH, NC 27601
PHONE: 919-835-1494 FAX: 919-653-5847
WWW.KIMLEY-HORN.COM
NC CERTIFICATE OF AUTHORIZATION: F-0102

© 2011 KIMLEY-HORN AND ASSOCIATES, INC.

KHA PROJECT 011170001
DATE 7/29/11
SCALE AS SHOWN
DESIGNED BY COB
DRAWN BY WJB
CHECKED BY PAB

THE RETREAT AT RALEIGH
PREPARED FOR
LANDMARK PROPERTIES

RALEIGH NORTH CAROLINA

NORTH CAROLINA PROFESSIONAL SEAL 032582 ENGINEER CHRISTOPHER A. BOTTICHER

STORM DRAINAGE DETAILS

SHEET NUMBER
C-25

Plotted By:Brewer, Jordon Sheet Set:Retreat at Raleigh Layout:C-25 STORM DRAINAGE DETAILS September 21, 2011 10:37:08am K:\RDT_LDEV\011170001_The Retreat at Raleigh-SP-CD\15_CAD Files\Dwgs\C-25 STORM DRAINAGE DETAILS.dwg
This document, together with the concepts and designs presented herein, as an instrument of service, is intended only for the specific purpose and client for which it was prepared. Reuse of and improper reliance on this document without written authorization and adaptation by Kimley-Horn and Associates, Inc. shall be without liability to Kimley-Horn and Associates, Inc.