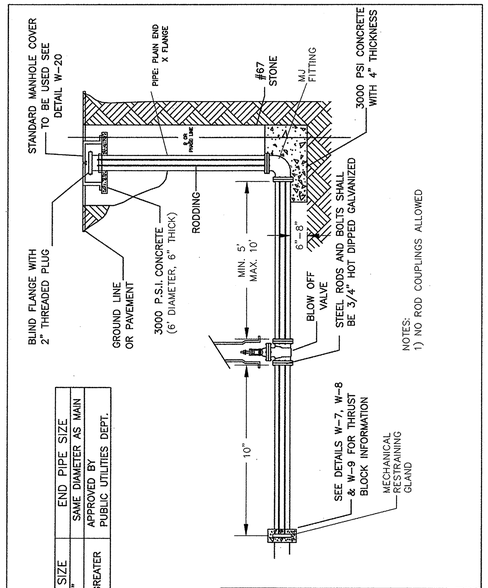

NOTES:
1) NO ROD COUPLINGS ALLOWED

MAIN SIZE	END PIPE SIZE
6" – 12"	SAME DIAMETER AS MAIN
16" & GREATER	APPROVED BY PUBLIC UTILITIES DEPT.

CITY OF RALEIGH
DEPARTMENT OF PUBLIC UTILITIES
TEMPORARY WATER MAIN BLOW OFF ASSEMBLY

DWG. NO.	REVISIONS	DATE	REVISIONS	DATE
W-21	D.W.C.	12-28-99	A.B.B.	4-12-04
	RRH	3-31-00		

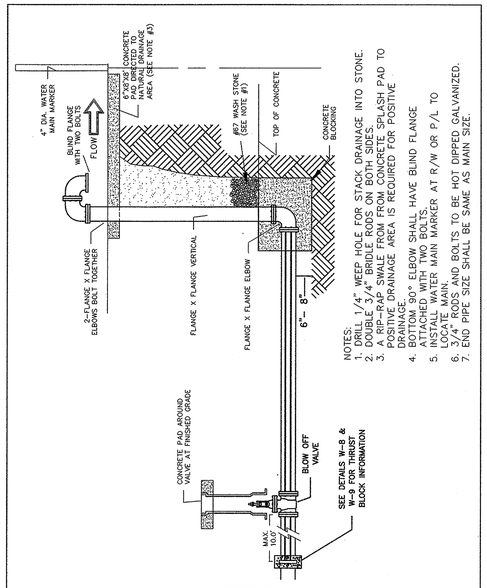

NOTES:
1. DRILL 1/4" WEEP HOLE FOR STACK DRAINAGE INTO STONE.
2. DOUBLE 3/4" BRIDLE RODS ON BOTH SIDES.
3. A RIP-RAP SWALE FROM FROM CONCRETE SPLASH PAD TO POSITIVE DRAINAGE AREA IS REQUIRED FOR POSITIVE DRAINAGE.
4. BOTTOM 90° ELBOW SHALL HAVE BLIND FLANGE ATTACHED WITH TWO BOLTS.
5. INSTALL WATER MAIN MARKER AT R/W OR P/L TO MAINTAIN VISIBILITY.
6. 3/4" RODS AND BOLTS TO BE HOT DIPPED GALVANIZED.
7. END PIPE SIZE SHALL BE SAME AS MAIN SIZE.

CITY OF RALEIGH
DEPARTMENT OF PUBLIC UTILITIES
PERMANENT WATER MAIN BLOW OFF ASSEMBLY

DWG. NO.	REVISIONS	DATE	REVISIONS	DATE
W-22	D.W.C.	12-28-99		
	A.B.B.	4-13-04		

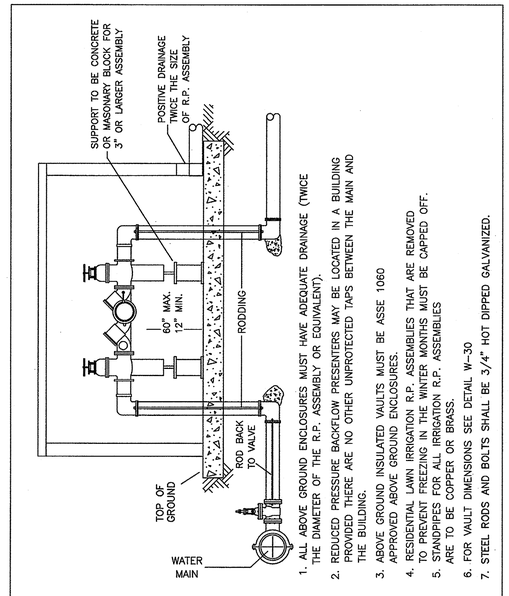

1. ALL ABOVE GROUND ENCLOSURES MUST HAVE ADEQUATE DRAINAGE (TWICE THE DIAMETER OF THE R.P. ASSEMBLY OR EQUIVALENT).
2. REDUCED PRESSURE BACKFLOW PRESENTERS MAY BE LOCATED IN A BUILDING PROVIDED THERE ARE NO OTHER UNPROTECTED TAPS BETWEEN THE MAIN AND THE BUILDING.
3. ABOVE GROUND INSULATED VAULTS MUST BE ASSE 1060 APPROVED ABOVE GROUND ENCLOSURES.
4. RESIDENTIAL LAWN IRRIGATION R.P. ASSEMBLIES THAT ARE REMOVED TO PREVENT FREEZING IN THE WINTER MONTHS MUST BE CAPPED OFF.
5. STANDPIPES FOR ALL IRRIGATION R.P. ASSEMBLIES ARE TO BE COPPER OR BRASS.
6. FOR VAULT DIMENSIONS SEE DETAIL W-30
7. STEEL RODS AND BOLTS SHALL BE 3/4" HOT DIPPED GALVANIZED.

CITY OF RALEIGH
DEPARTMENT OF PUBLIC UTILITIES
REDUCED PRESSURE BACKFLOW PREVENTER

DWG. NO.	REVISIONS	DATE	REVISIONS	DATE
W-36	Y.C.A.	12-31-91	A.B.B.	7-10-04
	D.W.C.	11-8-99		

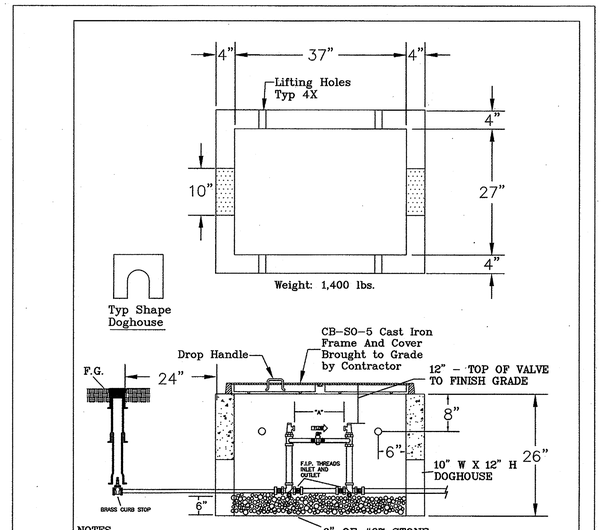

NOTES

1. METER AS MANUFACTURED BY SENSUS OR NEPTUNE.
2. BACKFILL TAMPED IN 6" LIFTS.
3. REINFORCEMENT: #4 @ 6" OCEW
4. CONCRETE: 4,000 PSI @ 28 DAYS
5. ALL RPZ BACKFLOW PREVENTION DEVICES MUST BE INSTALLED PRIOR TO METER BEING SET.
6) ALL COPPER SETTERS ARE TO HAVE A BALL TYPE SHUT OFF VALVE ON BOTH SIDES OF COPPER SETTER WITH HIGH RISE BYPASS THAT IS MANUFACTURED BY FORD, MUELLER, OR AY McDONALD. (NO EXCEPTIONS)

DIMENSION "A"	
1½" METER	13 ½"
2" METER	17 ½"

CITY OF RALEIGH
DEPARTMENT OF PUBLIC UTILITIES
TYPICAL 1 1/2"- 2" WATER METER BOX INSTALLATION

DWG. NO.	REVISIONS	DATE	REVISIONS	DATE
W-31	A.B.B.	8-17-04		

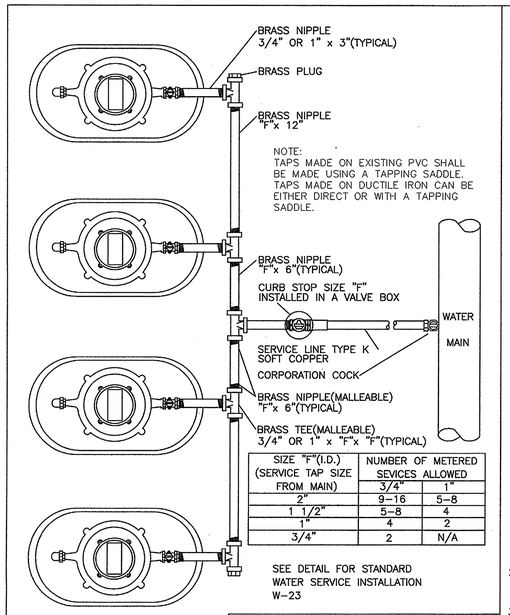

NOTE:
TAPS MADE ON EXISTING PVC SHALL BE MADE USING A TAPPING SADDLE. TAPS MADE ON DUCTILE IRON CAN BE EITHER DIRECT OR WITH A TAPPING SADDLE.

SIZE "F"(I.D.) (SERVICE TAP SIZE FROM MAIN)	NUMBER OF METERED SEVICES ALLOWED	
	3/4"	1"
2"	9-16	5-8
1 1/2"	5-8	4
1"	4	2
3/4"	2	N/A

SEE DETAIL FOR STANDARD WATER SERVICE INSTALLATION W-23

CITY OF RALEIGH
DEPARTMENT OF PUBLIC UTILITIES
STANDARD GANG METER ASSEMBLY

DWG. NO.	REVISIONS	DATE	REVISIONS	DATE
W-26	METERED SERV.	8-17-81	Y.C.A.	12-31-91
	METERED SERV.	4-1-82	D.W.C.	11-18-99

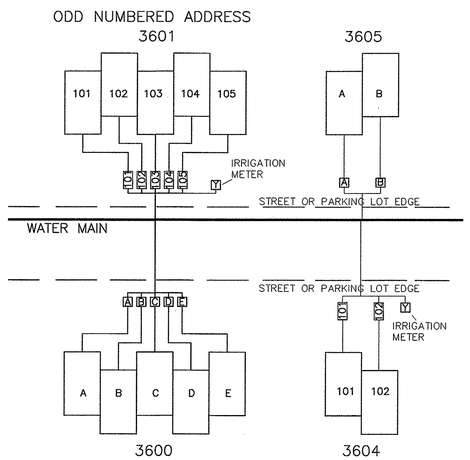

NOTES:
1. EVEN NUMBERED UNITS' METERS SHALL BE SET TO BE READ RIGHT TO LEFT (WHEN FACING BUILDING)
2. ODD NUMBERED UNITS' METERS SHALL BE SET TO BE READ LEFT TO RIGHT (WHEN FACING BUILDING)
3. IF IRRIGATION METER IS INCLUDED, IT SHALL BE THE LAST METER IN NUMBERING SEQUENCE.
4. UNIT 'Y' (FOR YARD METER) SHALL BE USED TO INDICATE IRRIGATION METER.

CITY OF RALEIGH
DEPARTMENT OF PUBLIC UTILITIES
GANG METER ADDRESSING SINGLE STORY BUILDING

DWG. NO.	REVISIONS	DATE	REVISIONS	DATE
W-27	RRH	3-31-00		
	ABB	6-17-04		

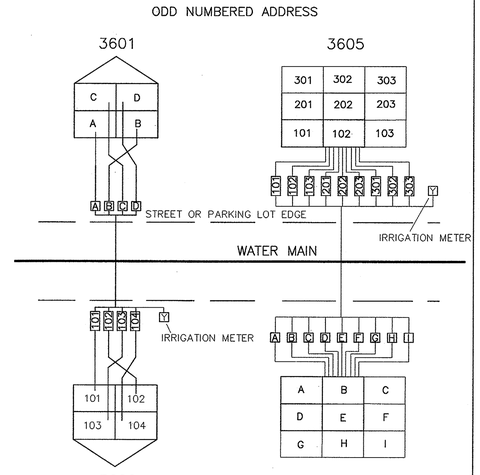

NOTES:
1. EVEN NUMBERED UNITS' METERS SHALL BE SET TO BE READ RIGHT TO LEFT (WHEN FACING BUILDING)
2. ODD NUMBERED UNITS' METERS SHALL BE SET TO BE READ LEFT TO RIGHT (WHEN FACING BUILDING)
3. IF IRRIGATION METER IS INCLUDED, IT SHALL BE THE LAST METER IN NUMBERING SEQUENCE.
4. UNIT 'Y' (FOR YARD METER) SHALL BE USED TO INDICATE IRRIGATION METER.

CITY OF RALEIGH
DEPARTMENT OF PUBLIC UTILITIES
GANG METER ADDRESSING MULTI-STORY BUILDING

DWG. NO.	REVISIONS	DATE	REVISIONS	DATE
W-28	ABB	6-17-04	RRH	3-31-00

TYPICAL NOTES:

1)–ALL EXPOSED PIPING AND FITTINGS TO BE GALVANIZED WITH EXCEPTION OF STORZ CONNECTION
2)–40' MAX. FROM FDC TO FIRE APPARATUS ACCESS (DRIVEWAY)
3)–FOR NFPA 13R SYSTEMS (2 1/2" RISER AND SMALLER) SINGLE FDC W/ RALEIGH THREADS (3.340 X 6 SHARPE V FORM)
4)–WHEN BUILDING HT. IS GREATER THAN 200' USE RAL. SIAMESE
5)–AN APPROVED CONNECTION (TAPPING NOT APPROVED)

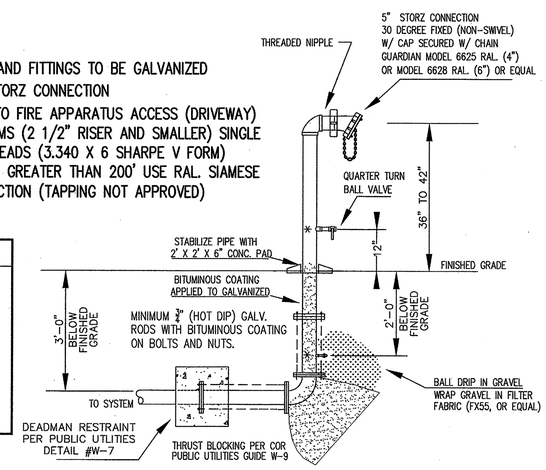

S-5-11

UTILITY INSTALLATIONS AND OTHER PUBLIC FACILITIES, INCLUDING SIDEWALKS AND HANDICAP RAMPS ARE TO BE CONSTRUCTED ON ALL STREETS AS SPECIFIED BY CITY CODE. THESE FACILITIES HAVE BEEN APPROVED BY THE CITY OF RALEIGH AND SHALL BE SO INSTALLED UNLESS A CHANGE IS AUTHORIZED BY WRITTEN APPROVAL. PUBLIC SANITARY SEWER EASEMENTS ARE TO BE RECORDED PRIOR TO FINAL ACCEPTANCE.

SIGNATURE:
TRANSPORTATION SERVICES: N/A
PUBLIC UTILITIES: CS 10/14/11
CONSERVATION ENGINEER: KHA
PLANNING: N/A

CITY OF RALEIGH FIRE DEPARTMENT
FIRE PROTECTION DIVISION
310 WEST MARTIN ST. RALEIGH, NC 27602

DESCRIPTION:	REVISIONS:	DATE:	DRAWING NO.
YARD FDC DETAIL REQUIREMENTS	5-1-06 W Warren	S. B.	FP-15

ALL CONSTRUCTION TO BE IN ACCORDANCE WITH ALL CITY OF RALEIGH AND/OR NCDOT STANDARDS AND SPECIFICATIONS.

No.	REVISIONS	DATE	BY
1	CITY OF RALEIGH 1ST REVIEW COMMENTS	9/21/11	WJB

Kimley-Horn and Associates, Inc.

© 2011 KIMLEY-HORN AND ASSOCIATES, INC.

333 FAYETTEVILLE STREET, SUITE 600, RALEIGH, NC 27601
PHONE: 919-835-1494 FAX: 919-653-5847
WWW.KIMLEY-HORN.COM
NC CERTIFICATE OF AUTHORIZATION: F-0102

KHA PROJECT 011170001
DATE 7/29/11
SCALE AS SHOWN
DESIGNED BY COB
DRAWN BY WJB
CHECKED BY PAB

THE RETREAT AT RALEIGH
PREPARED FOR
LANDMARK PROPERTIES

RALEIGH NORTH CAROLINA

NORTH CAROLINA PROFESSIONAL SEAL 032582 ENGINEER CHRISTOPHER A. BOTTOM

WATER DETAILS

SHEET NUMBER
C-30

Plotted By:Brewer, Jordan Sheet Set:Retreat at Raleigh Layout:C-30 WATER DETAILS September 21, 2011 10:37:59am K:\RDT_LDEV\011170001_The Retreat at Raleigh-SP-CD\15_CAD Files\Dwgs\C-30 WATER DETAILS.dwg
This document, together with the concepts and designs presented herein, as an instrument of service, is intended only for the specific purpose and client for which it was prepared. Reuse of and improper reliance on this document without written authorization and adaptation by Kimley-Horn and Associates, Inc. shall be without liability to Kimley-Horn and Associates, Inc.