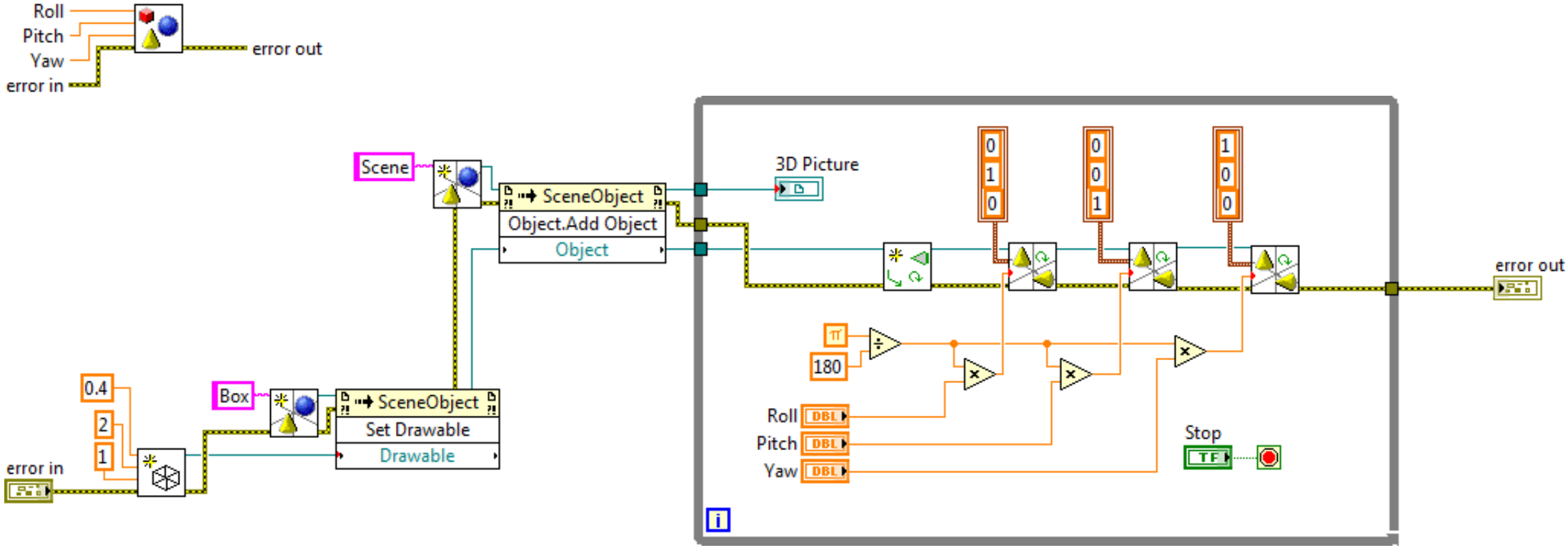
Roll
Pitch
Yaw
error in
error out
Scene
SceneObject
Object.Add Object
Object
3D Picture
0
1
0
0
0
1
1
0
0
error out
π
180
Roll
Pitch
Yaw
DBL
Stop
TF
0.4
2
1
error in
Box
SceneObject
Set Drawable
Drawable