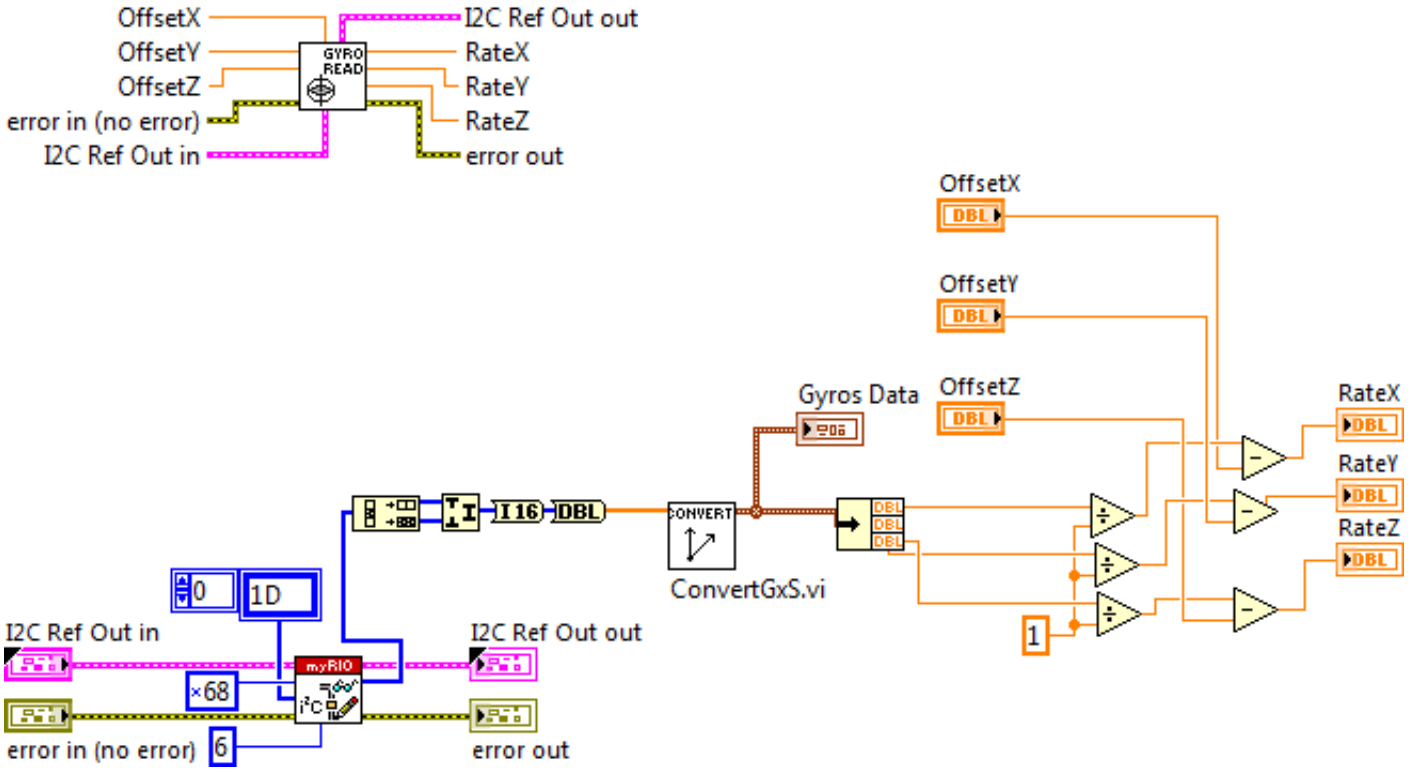
OffsetX
OffsetY
OffsetZ
error in (no error)
I2C Ref Out in
GYRO READ
I2C Ref Out out
RateX
RateY
RateZ
error out
OffsetX
OffsetY
OffsetZ
Gyros Data
RateX
RateY
RateZ
I16
DBL
CONVERT
ConvertGxS.vi
0
1D
I2C Ref Out in
I2C Ref Out out
×68
myRIO
error in (no error)
6
error out
1