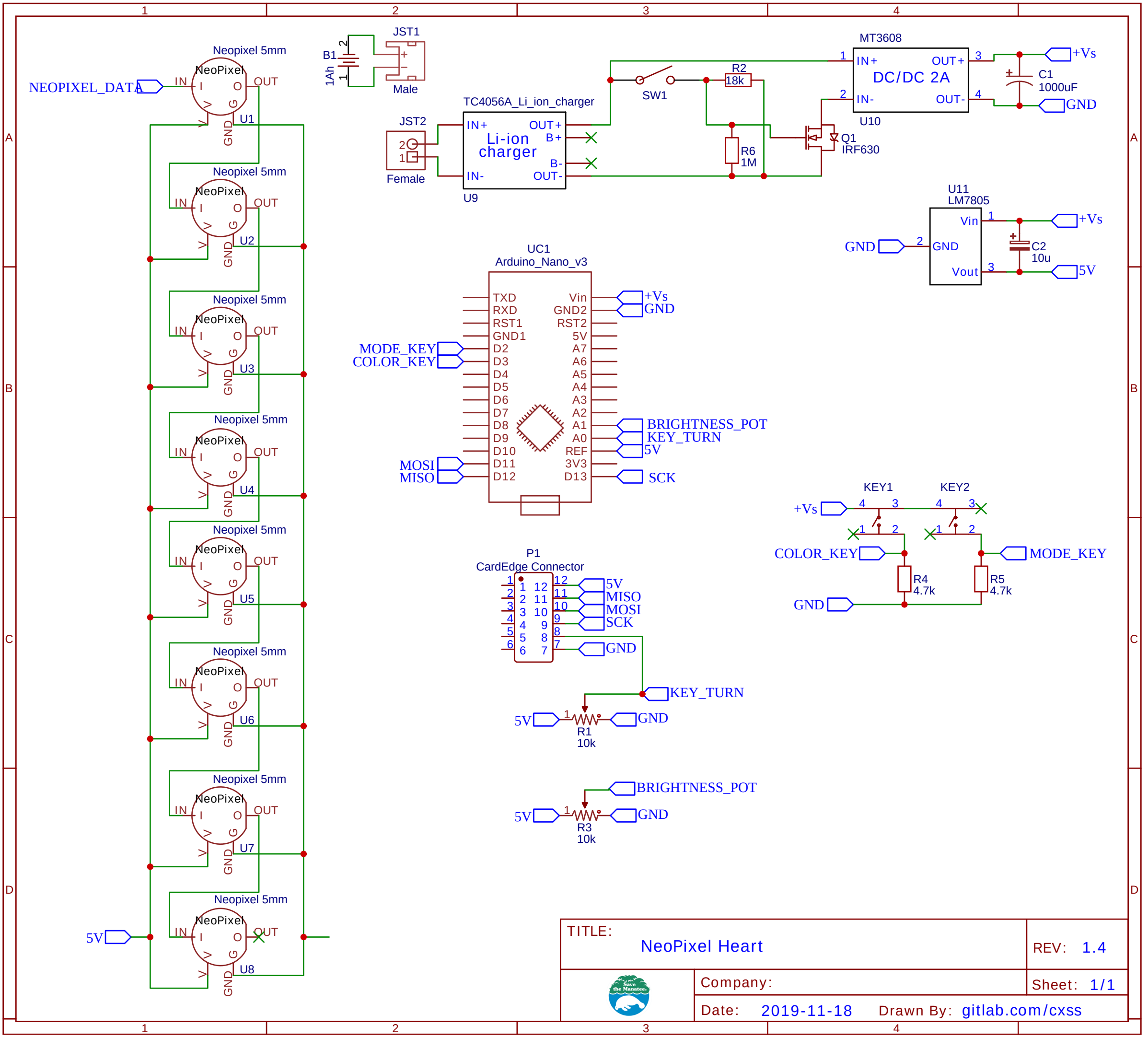

TITLE: NeoPixel Heart	REV: 1.4
Company:	Sheet: 1/1
Date: 2019-11-18	Drawn By: gitlab.com/cxss