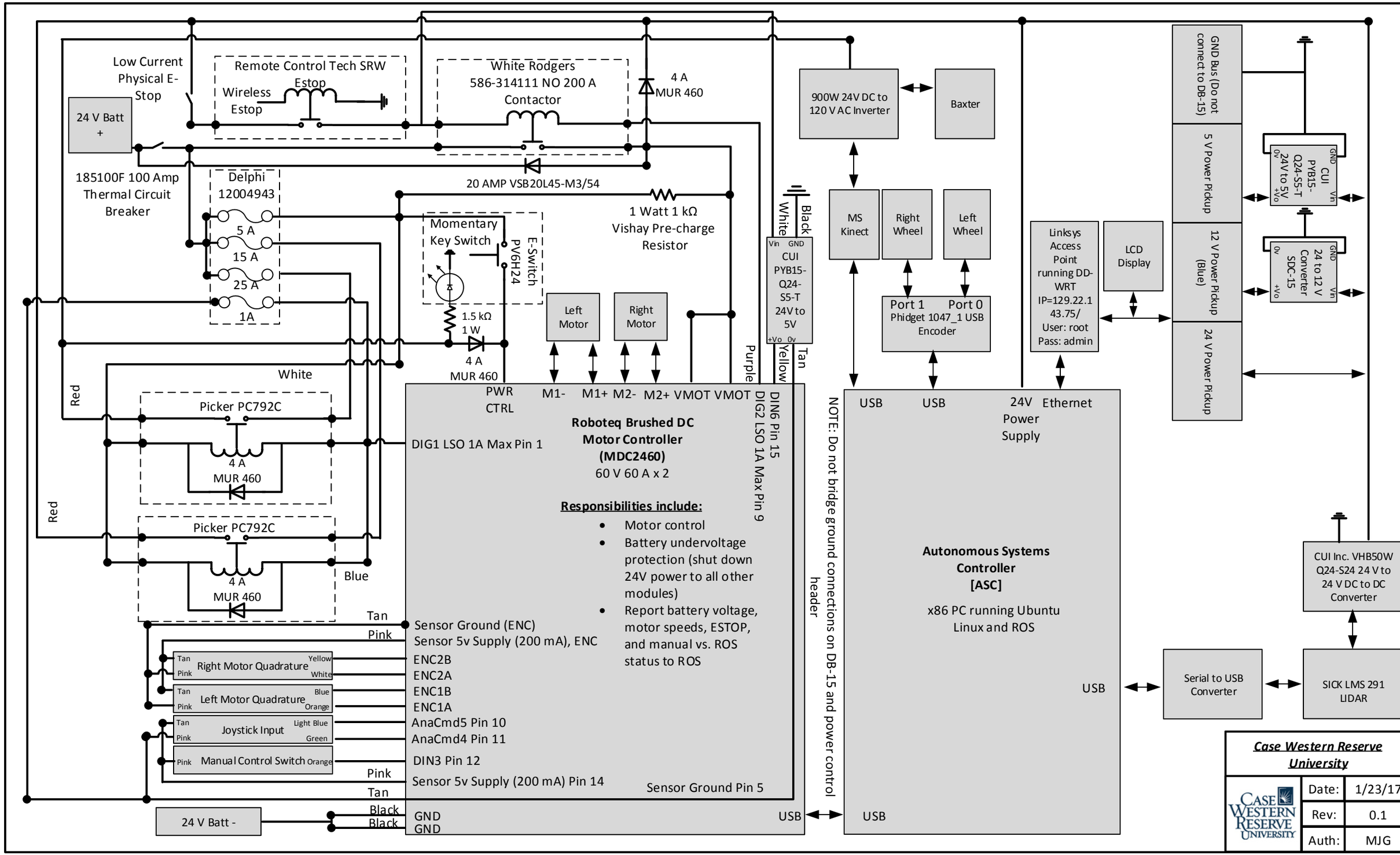
Low Current Physical E-Stop
24 V Batt +
185100F 100 Amp Thermal Circuit Breaker
Remote Control Tech SRW
Wireless Estop
Estop
White Rodgers 586-314111 NO 200 A Contactor
4 A MUR 460
20 AMP VSB20L45-M3/54
1 Watt 1 kΩ Vishay Pre-charge Resistor
Delphi 12004943
5 A
15 A
25 A
1A
Momentary Key Switch
PV6H24 E-Switch
1.5 kΩ 1 W
4 A MUR 460
Left Motor
Right Motor
White
Black
CUI PYB15-Q24-S5-T 24V to 5V
Vin GND
+Vo 0v
Yellow
Tan
Purple
Red
Picker PC792C
4 A MUR 460
Blue
PWR CTRL
M1- M1+ M2- M2+ VMOT VMOT
DIN6 Pin 15
DIG2 LSO 1A Max Pin 9
DIG1 LSO 1A Max Pin 1
Roboteq Brushed DC Motor Controller (MDC2460)
60 V 60 A x 2
Responsibilities include:
• Motor control
• Battery undervoltage protection (shut down 24V power to all other modules)
• Report battery voltage, motor speeds, ESTOP, and manual vs. ROS status to ROS
Sensor Ground (ENC)
Sensor 5v Supply (200 mA), ENC
ENC2B
ENC2A
ENC1B
ENC1A
AnaCmd5 Pin 10
AnaCmd4 Pin 11
DIN3 Pin 12
Sensor 5v Supply (200 mA) Pin 14
Sensor Ground Pin 5
Right Motor Quadrature
Left Motor Quadrature
Joystick Input
Manual Control Switch
Tan
Pink
Yellow
White
Blue
Orange
Light Blue
Green
24 V Batt -
Black
GND
USB
NOTE: Do not bridge ground connections on DB-15 and power control header
900W 24V DC to 120 V AC Inverter
Baxter
MS Kinect
Right Wheel
Left Wheel
Port 1 Port 0
Phidget 1047_1 USB Encoder
Linksys Access Point running DD-WRT IP=129.22.143.75/ User: root Pass: admin
LCD Display
GND Bus (Do not connect to DB-15)
5 V Power Pickup
12 V Power Pickup (Blue)
24 V Power Pickup
CUI PYB15-Q24-S5-T 24V to 5V
CUI SDC-15 24 to 12 V Converter
USB
24V Power Supply
Ethernet
Autonomous Systems Controller [ASC]
x86 PC running Ubuntu Linux and ROS
CUI Inc. VHB50W Q24-S24 24 V to 24 V DC to DC Converter
Serial to USB Converter
SICK LMS 291 LIDAR
Case Western Reserve University
Date: 1/23/17
Rev: 0.1
Auth: MJG