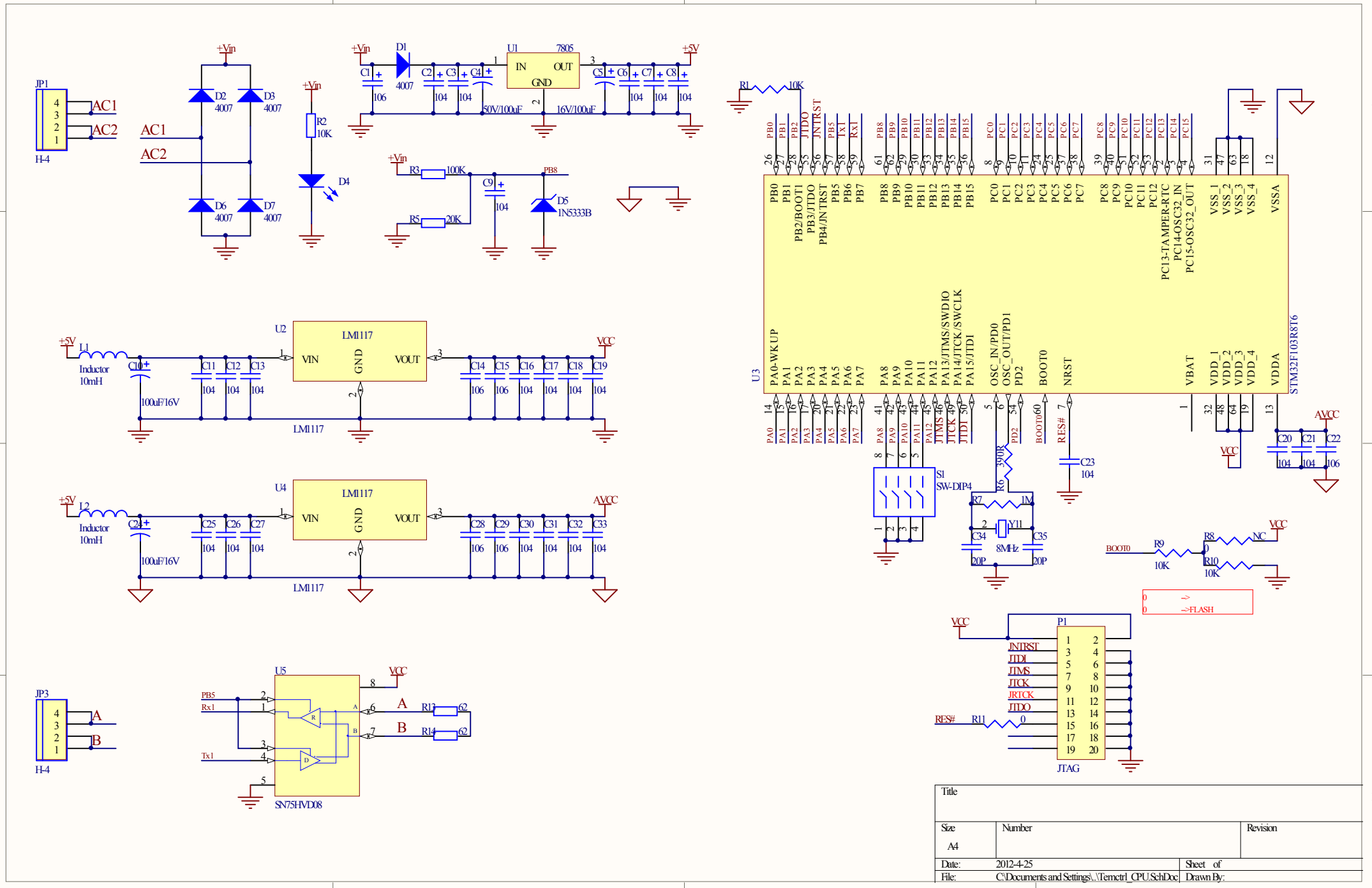

JP1
H-4
AC1
AC2
+Vin
D2 4007
D3 4007
D6 4007
D7 4007
R2 10K
D4
D1 4007
U1 7805
IN
OUT
GND
C1 106
C2 104
C3 104
C4 104
C5 104
C6 104
C7 104
C8 104
50V/100uF
16V/100uF
+5V
R3 100K
R5 20K
C9 104
PB8
D5 1N5333B
U2
LM1117
VIN
GND
VOUT
L1 Inductor 10mH
C10 100uF/16V
C11 104
C12 104
C13 104
C14 106
C15 106
C16 104
C17 104
C18 104
C19 104
VCC
U4
L2 Inductor 10mH
C24 100uF/16V
C25 104
C26 104
C27 104
C28 106
C29 106
C30 104
C31 104
C32 104
C33 104
AVCC
JP3
A
B
U5
SN75HVD08
PB5
Rx1
Tx1
R13 62
R14 62
R1 10K
U3
STM32F103R8T6
PB0
PB1
PB2/BOOT1
PB3/JTDO
PB4/JNTRST
PB5
PB6
PB7
PB8
PB9
PB10
PB11
PB12
PB13
PB14
PB15
PC0
PC1
PC2
PC3
PC4
PC5
PC6
PC7
PC8
PC9
PC10
PC11
PC12
PC13-TAMPER-RTC
PC14-OSC32_IN
PC15-OSC32_OUT
VSS_1
VSS_2
VSS_3
VSS_4
VSSA
PA0-WKUP
PA1
PA2
PA3
PA4
PA5
PA6
PA7
PA8
PA9
PA10
PA11
PA12
PA13/JTMS/SWDIO
PA14/JTCK/SWCLK
PA15/JTDI
OSC_IN/PD0
OSC_OUT/PD1
PD2
BOOT0
NRST
VBAT
VDD_1
VDD_2
VDD_3
VDD_4
VDDA
S1 SW-DIP4
R6 390R
R7 1M
Y11 8MHz
C34 20P
C35 20P
C23 104
C20 104
C21 104
C22 106
BOOT0
R9 10K
R8 NC
R10 10K
P1
JTAG
JNTRST
JTDI
JTMS
JTCK
JRTCK
JTDO
RES#
R11 0
0 -->
0 -->FLASH
Title
Size A4
Number
Revision
Date: 2012-4-25
Sheet of
File: C:\Documents and Settings\..\Temctrl_CPU.SchDoc
Drawn By:

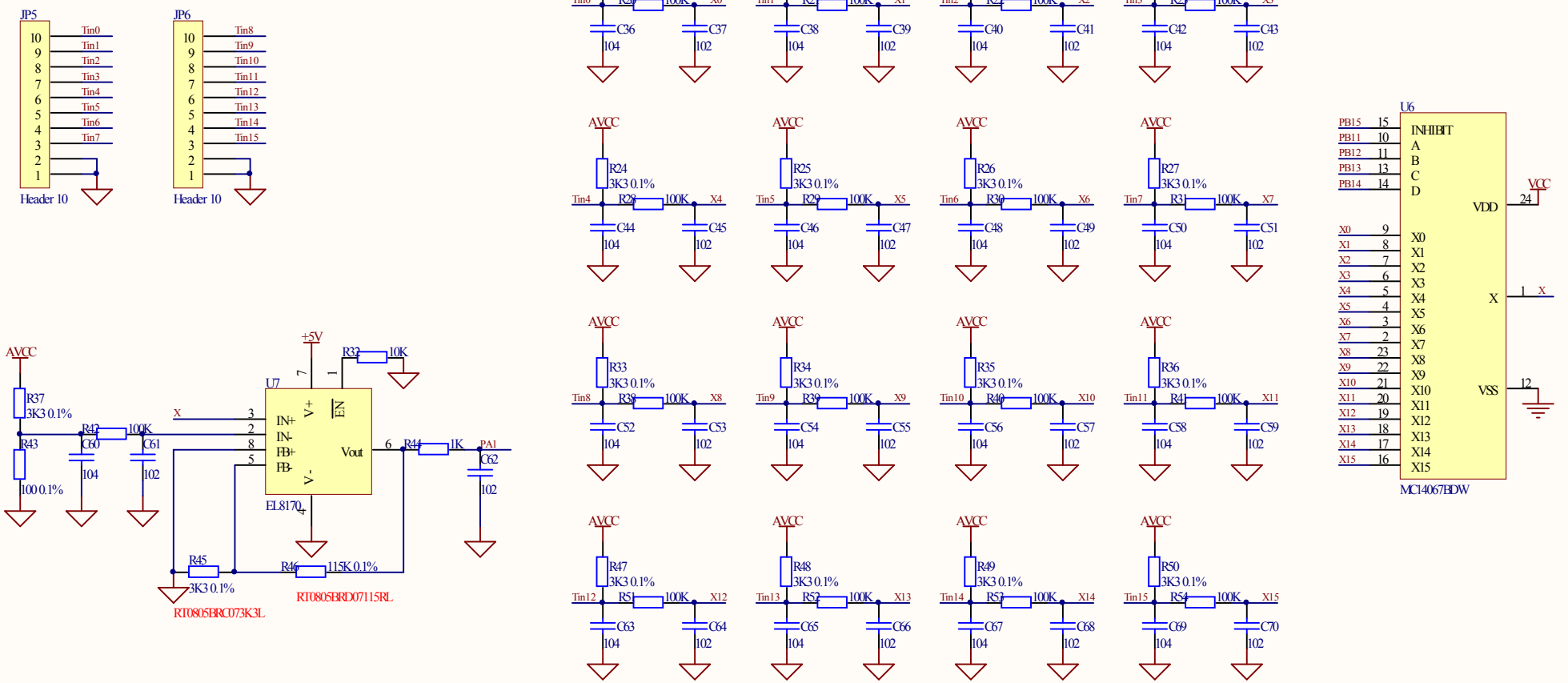

Title		
Size A4	Number	Revision
Date: 2012-4-25		Sheet of
File: C:\Documents and Settings\..\Temctrl_1.SchDoc		Drawn By:

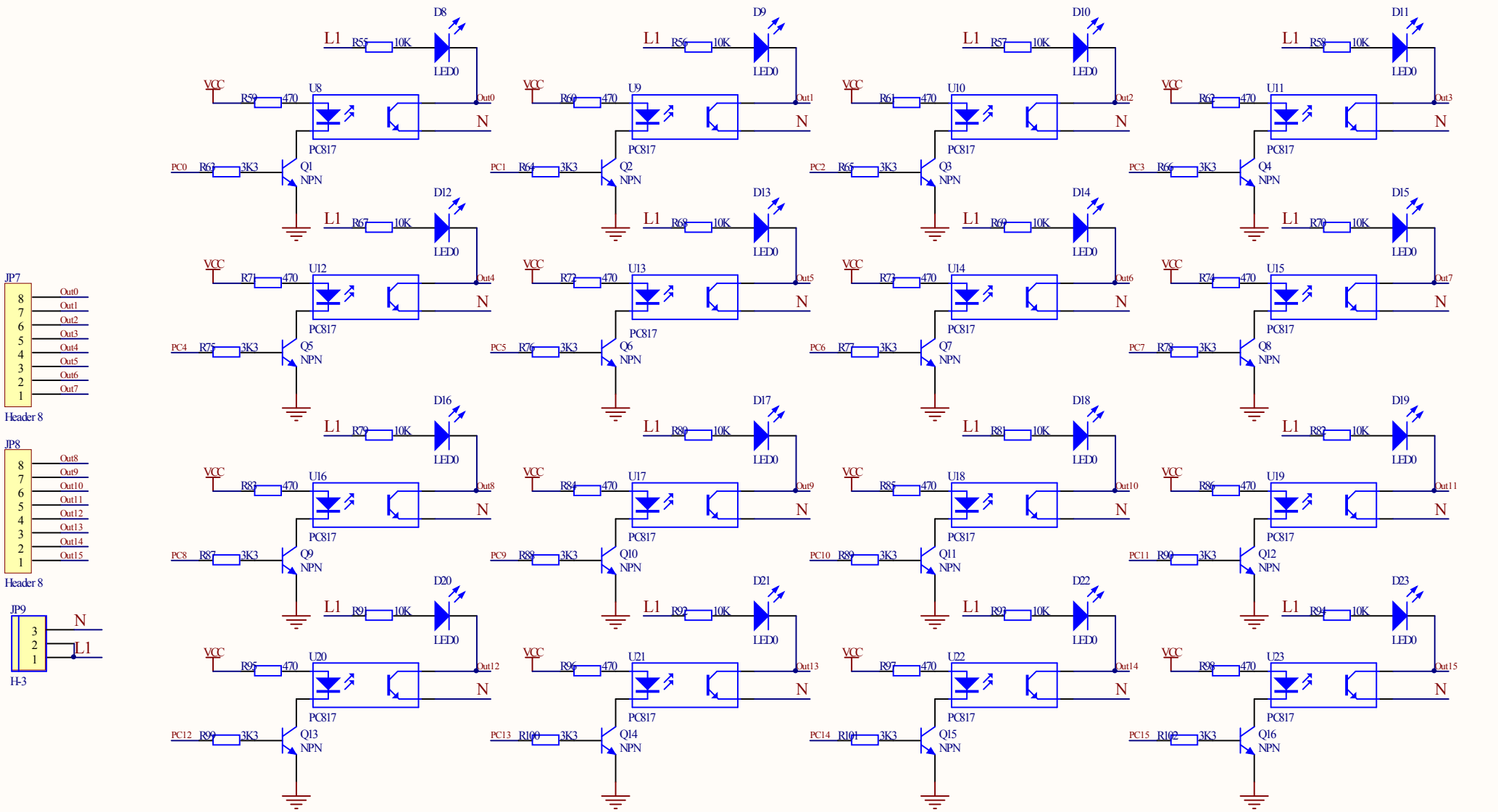

Title		
Size A4	Number	Revision
Date: 2012-4-25		Sheet of
File: C:\Documents and Settings\..\Temctrl_O.SchDoc		Drawn By:

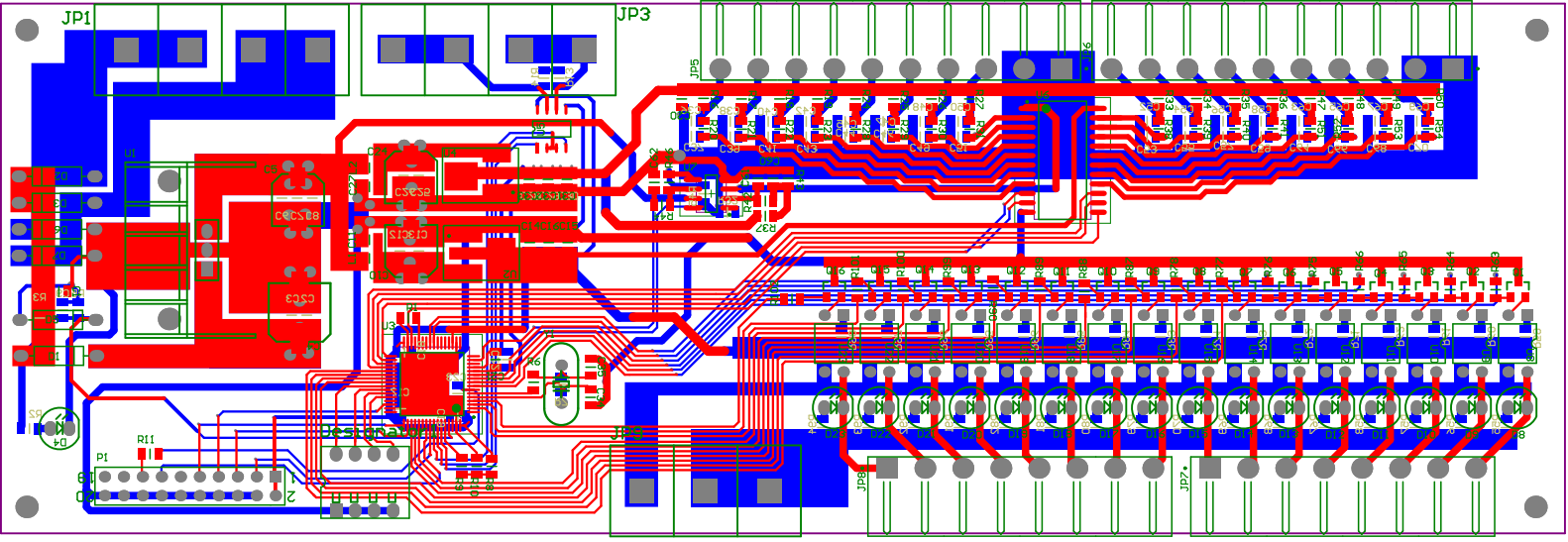
JP1
JP3
JP5
JP6
JP7
JP8
U1
U3
P1
R11
R6
R37
D4

Comment	Description	Designator	Footprint	LibRef	Quantity
106	Capacitor, Capacitor (Semiconductor SIM Model), Polarized Capacitor (Axial)	C1, C14, C15, C22, C28, C29	0805	Cap, Cap Pol2, Cap Semi	6
104	Capacitor, Capacitor (Semiconductor SIM Model), Polarized Capacitor (Axial)	C2, C3, C6, C7, C8, C9, C11, C12, C13, C16, C17, C18, C19, C20, C21, C23, C25, C26, C27, C30, C31, C32, C33, C36, C38, C40, C42, C44, C46, C48, C50, C52, C54, C56, C58, C60, C63, C65, C67, C69	0805	Cap, Cap Pol2, Cap Semi	40
50V/100uF	Polarized Capacitor (Radial)	C4	50V/100uF SOC	Cap Pol1	1
16V/100uF	Polarized Capacitor (Radial)	C5	100/16V SOC	Cap Pol1	1
100uF/16V	Polarized Capacitor (Radial)	C10, C24	100/16V SOC	Cap Pol1	2
20P	Capacitor (Semiconductor SIM Model)	C34, C35	0805	Cap Semi	2
102	Capacitor	C37, C39, C41, C43, C45, C47, C49, C51, C53, C55, C57, C59, C61, C62, C64, C66, C68, C70	0805	CAP	18
4007	Default Diode	D1, D2, D3, D6, D7	DIODE0.4	Diode	5
LED0	Typical INFRARED GaAs LED	D4, D8, D9, D10, D11, D12, D13, D14, D15, D16, D17, D18, D19, D20, D21, D22, D23	LED0.1-0.22	LED0	17
1N5333B	Zener Diode	D5	DIODE0.4	D Zener	1
H-4	Header, 4-Pin	JP1, JP3	P4	H-4	2
Header 10	Header, 10-Pin	JP5, JP6	HEAD10B-H - X	Header 10	2
Header 8	Header, 8-Pin	JP7, JP8	HEAD8B-H - X	Header 8	2
H-3	Header, 3-Pin	JP9	P3	H-3	1
Inductor	Inductor	L1, L2	0805	Inductor	2
JTAG	Header, 10-Pin, Dual row	P1	HDR2X10	Header 10X2	1
NPN	NPN Bipolar Transistor	Q1, Q2, Q3, Q4, Q5, Q6, Q7, Q8, Q9, Q10, Q11, Q12, Q13, Q14, Q15, Q16	S9013SMD	NPN	16
10K	Resistor	R1, R2, R9, R10, R32, R55, R56, R57, R58, R67, R68, R69, R70, R79, R80, R81, R82, R91, R92, R93, R94	0805	Res, Res3	21
100K	Resistor	R3, R20, R21, R22, R23, R28, R29, R30, R31, R38, R39, R40, R41, R42, R51, R52, R53, R54	0805	Res	18
20K	Resistor	R5	0805	Res	1
390R	Resistor	R6	0805	Res3	1
1M	Resistor	R7	0805	Res3	1
NC	Resistor	R8	0805	Res3	1
0	Resistor	R11	0805	Res3	1
62	Resistor	R13, R14	0805	Res	2
3K3 0.1%	Resistor	R16, R17, R18, R19, R24, R25, R26, R27, R33, R34, R35, R36, R37, R45, R47, R48, R49, R50	0805	Res	18
100 0.1%	Resistor	R43	0805	Res	1
1K	Resistor	R44	0805	Res	1
115K 0.1%	Resistor	R46	0805	Res	1
470	Resistor	R59, R60, R61, R62, R71, R72, R73, R74, R83, R84, R85, R86, R95, R96, R97, R98	0805	Res	16
3K3	Resistor	R63, R64, R65, R66, R75, R76, R77, R78, R87, R88, R89, R90, R99, R100, R101, R102	0805	Res	16
SW-DIP4	DIP Switch,4-bit	S1	SW-DIP-4	SW-DIP4	1
7805		U1	SIP-W3 /SRQ25	78*05	1
LM1117	LM1117	U2, U4	DSO-G3/P2.3	LM1117	2
STM32F103R8T6	STM32 ARM-based 32-bit MCU with 64 Kbytes Flash, 64-pin LQFP, Industrial Temperature	U3	LQFP64_N	STM32F103R8T6	1
SN75HVD08	Low-Power, Slew-Rate-Limited RS-485/RS-422 Transceiver	U5	SOP8-max485	MAX485CPA	1
MC14067BDW		U6	751E-04_M	MC14067	1
EL8170		U7	751-06_M	EL8170	1
PC817	4-Pin Phototransistor Optocoupler	U8, U9, U10, U11, U12, U13, U14, U15, U16, U17, U18, U19, U20, U21, U22, U23	DIP-4	Optoisolator1	16
XTAL	Crystal Oscillator	Y1	XTL	XTAL	1