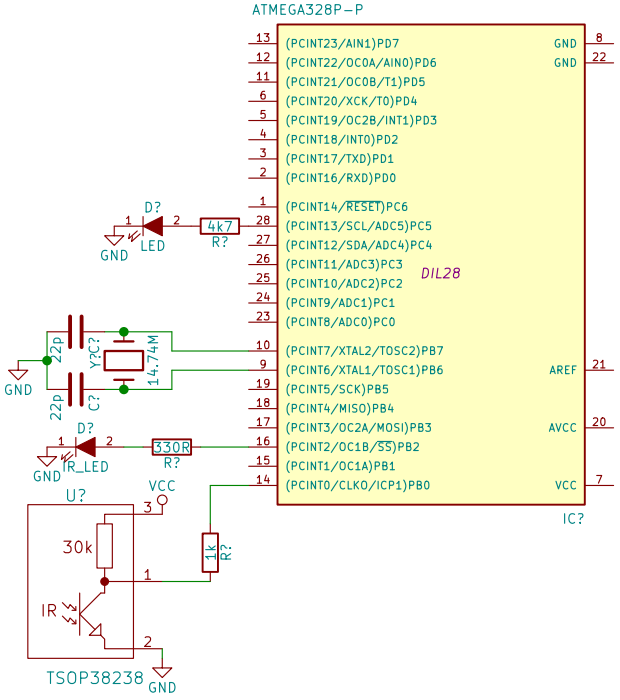

Infrared RC controller board to go with the code. Note that 38kHZ carrier is allready removed from ICP1 signal so there is no need for demodulation. Allmost any IR module will do the job.

Sheet: /
File: IR_TMR1_ajastin.sch

Title:

Size: A4	Date: 6.6.2018	**Rev:**
KiCad E.D.A. kicad 4.0.4+e1-630848ubuntu15.10.1-stable		Id: 1/1