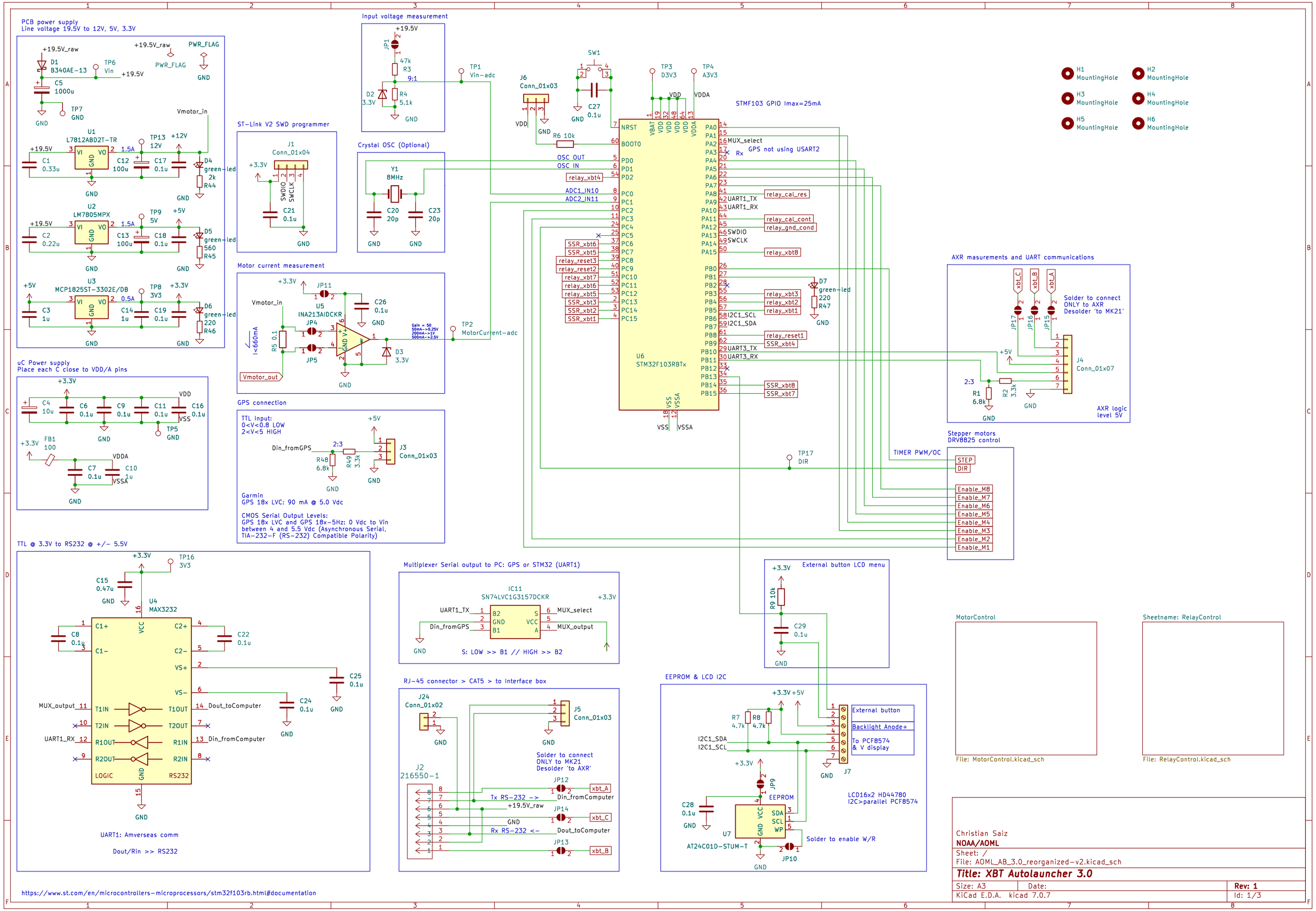

Christian Saiz
NOAA/AOML
Sheet: /
File: AOML_AB_3.0_reorganized-v2.kicad_sch

Title: XBT Autolauncher 3.0

Size: A3	Date:	**Rev: 1**
KiCad E.D.A. kicad 7.0.7		Id: 1/3

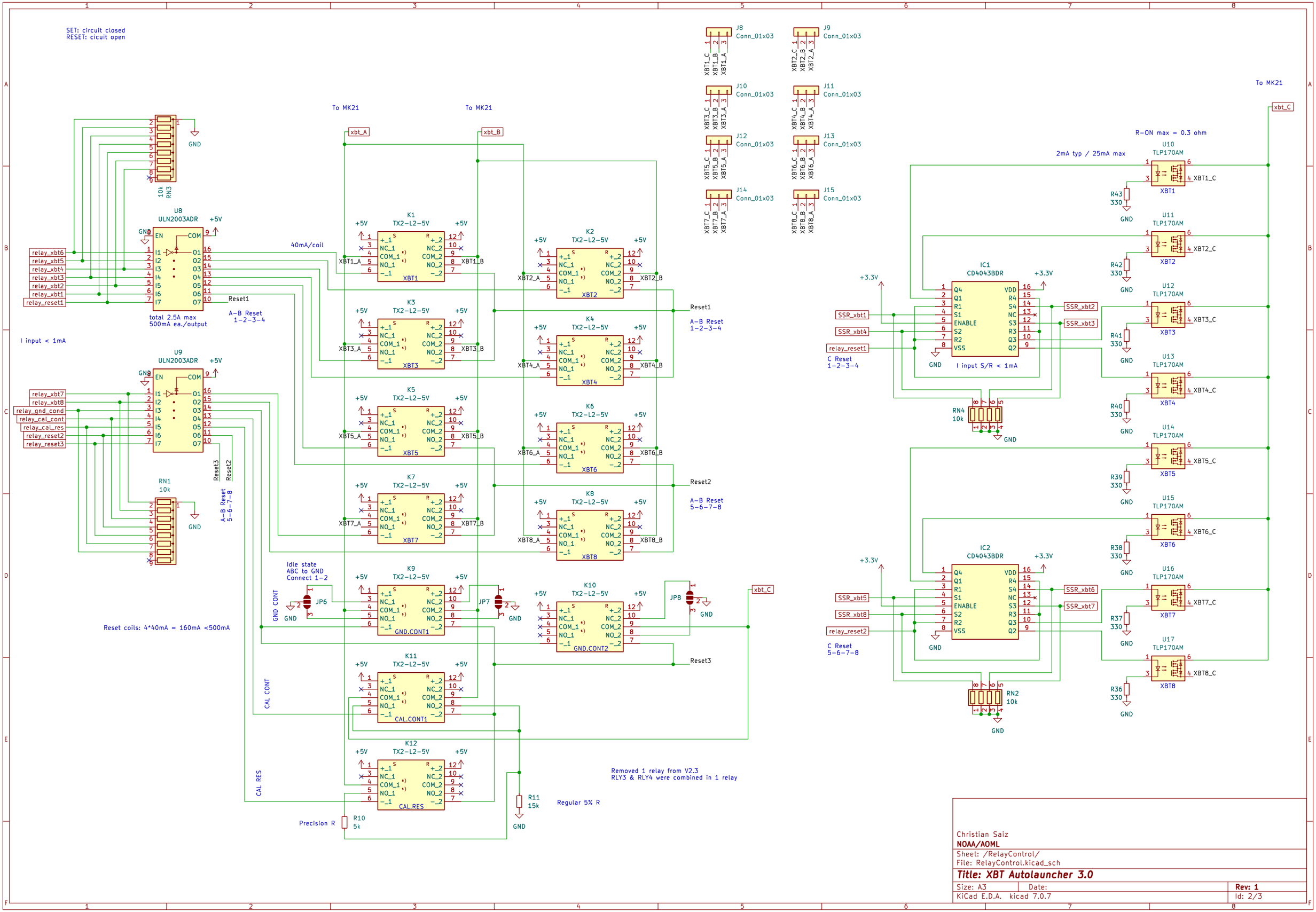

Christian Saiz
NOAA/AOML
Sheet: /RelayControl/
File: RelayControl.kicad_sch

Title: XBT Autolauncher 3.0

Size: A3	Date:	Rev: 1
KiCad E.D.A. kicad 7.0.7		Id: 2/3

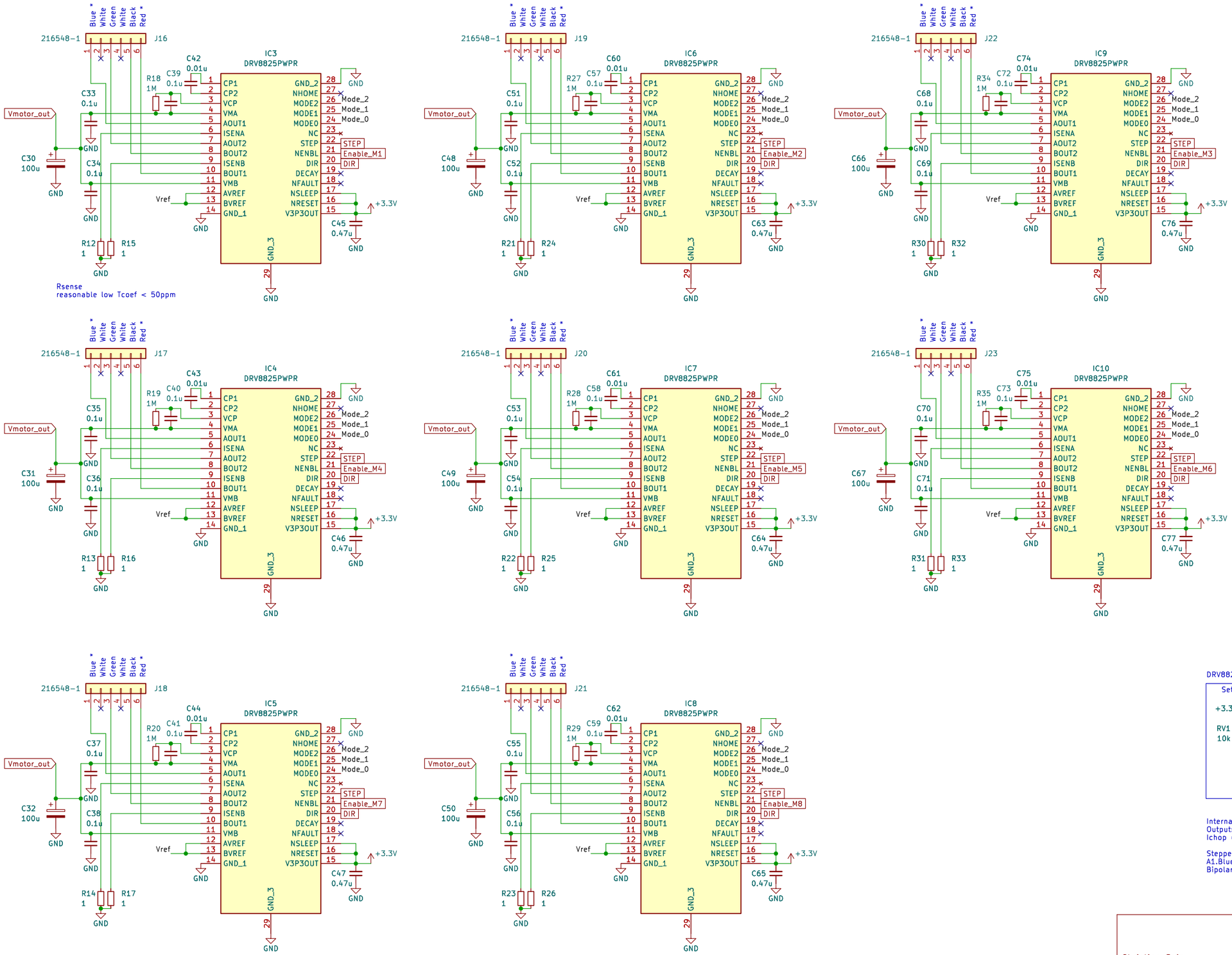

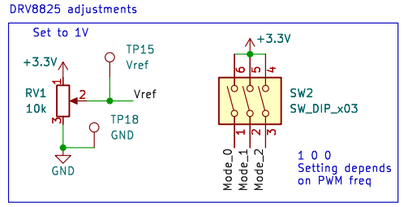

Internal Pull-down: nENBL, STEP, DIR, MODE012, nRESET, nSLEEP
Output: nHOME, nFAULT
Ichop = Vref/(5xRsense) = Imotor max

Stepper: Haydon linear actuator 36362-12
A1.Blue+ A2.Green- // B1.Red+ B2.Black-
Bipolar I=190 mA

Christian Saiz
NOAA/AOML

Sheet: /MotorControl/
File: MotorControl.kicad_sch

Title: XBT Autolauncher 3.0

Size: A3	Date:	Rev: 1
KiCad E.D.A. kicad 7.0.7		Id: 3/3