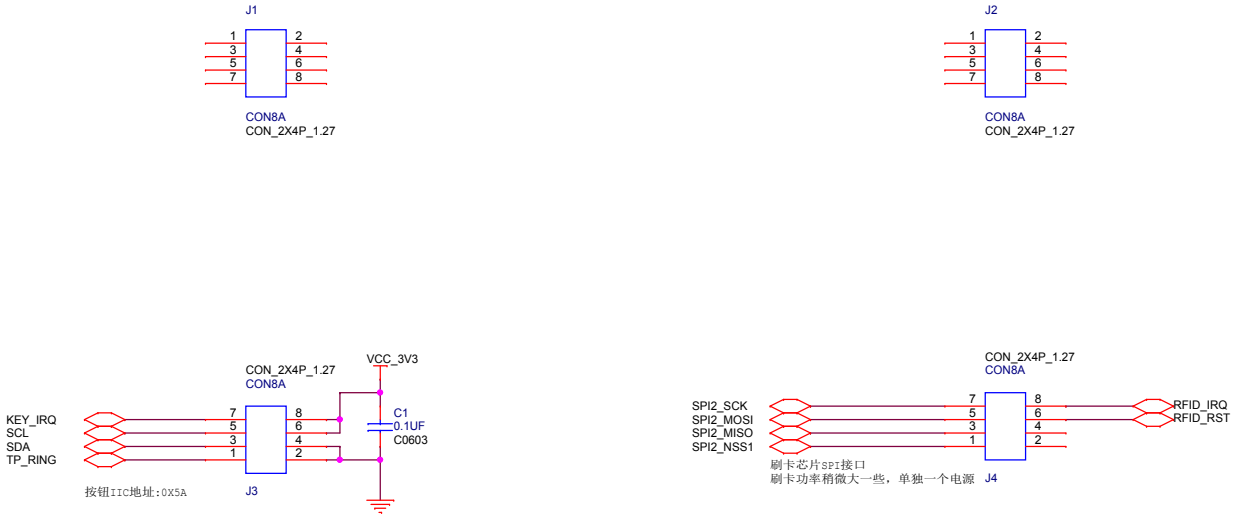

Title <Title>		
Size A3	Document Number <Doc>	Rev <RevCode>
Date: Wednesday, May 31, 2017	Sheet 1 of 3	

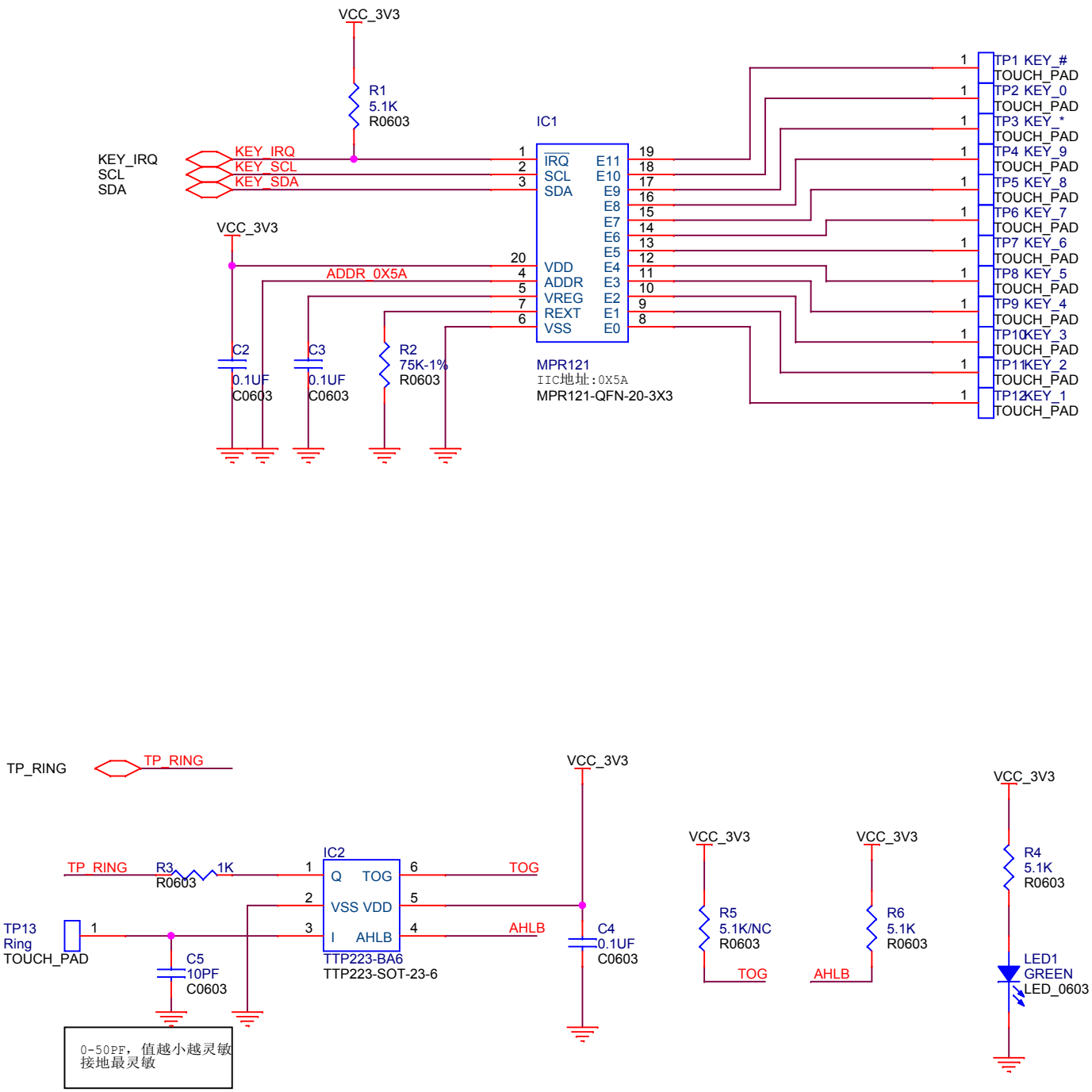

Title	<Title>	
Size A4	Document Number <Doc>	Rev <RevC
Date: Wednesday, May 31, 2017	Sheet 2 of 3	

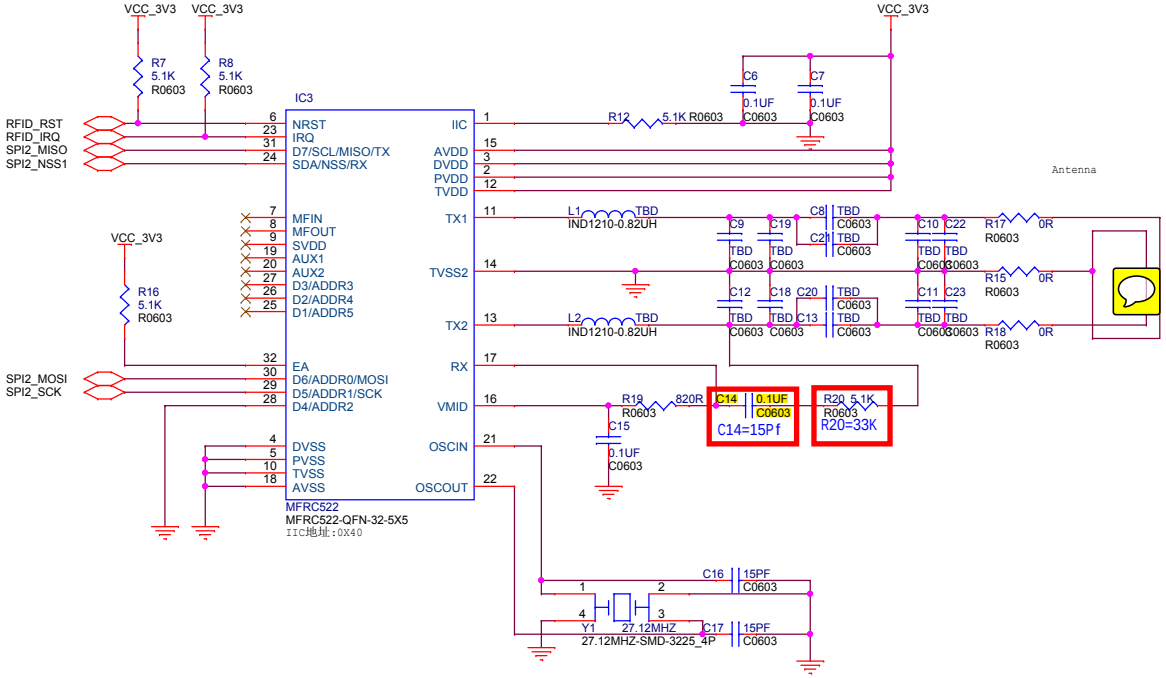

Title	<Title>	
Size A3	Document Number <Doc>	Rev <RevCode>
Date: Wednesday, May 31, 2017	Sheet 3 of 3	