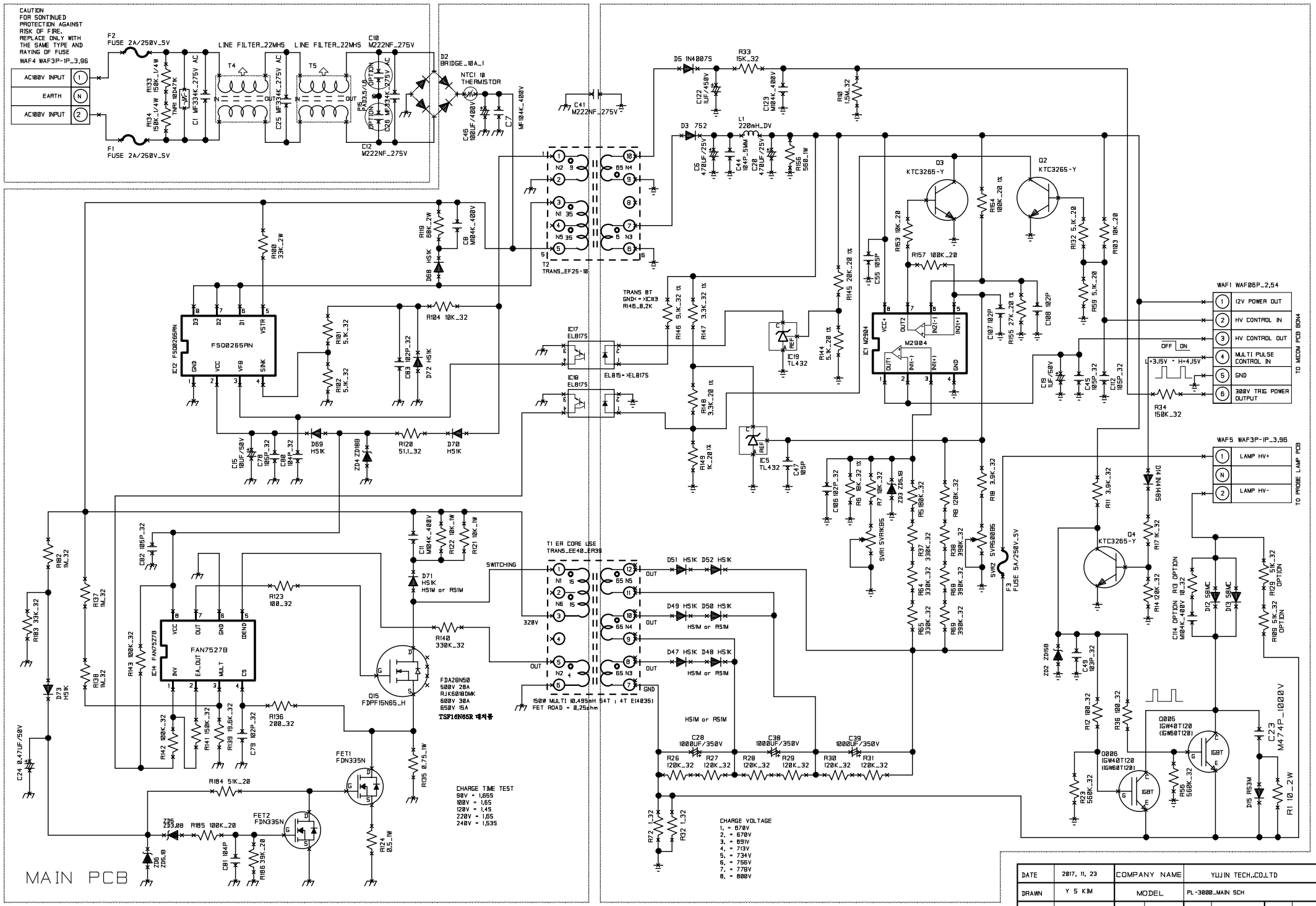

DATE	2017. 11. 23	COMPANY NAME	YUJIN TECH.CO.LTD				
DRAWN	Y S KIM	MODEL	PL-3000_MAIN SCH				
CHECKED	KIM	REV NO	REV_03	SHEET	A4	SCALE	1:1