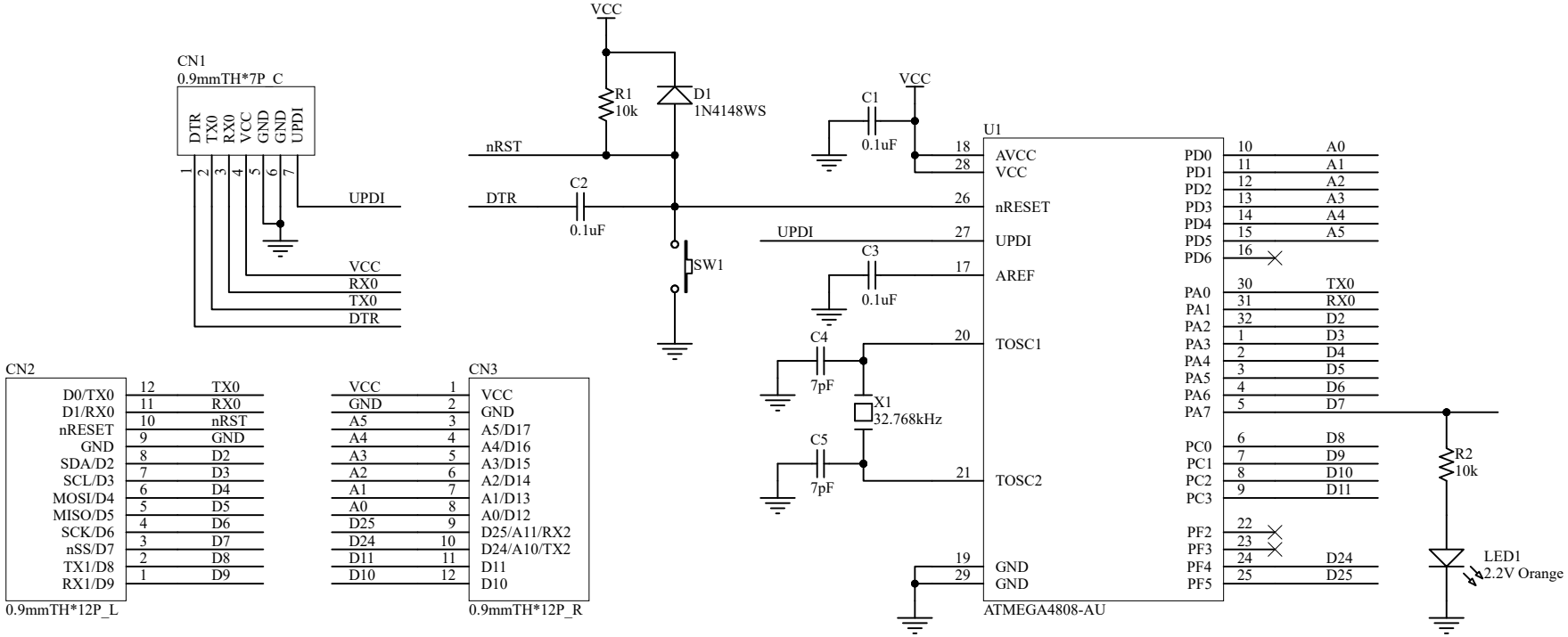

Title	Rhino Mini 4808 (Arduino Compatible)	
Size A4	Number	Revision
Date: 6/05/2023		Sheet of
File: C:\Users\..\Rhino Mini.SchDoc		Drawn By: