TEAM CYBERBOTS PRESENTS

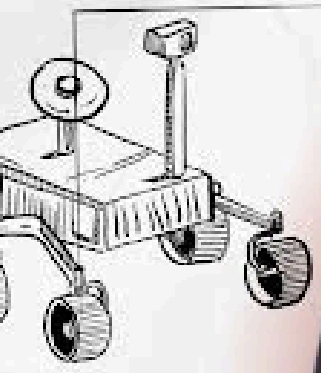

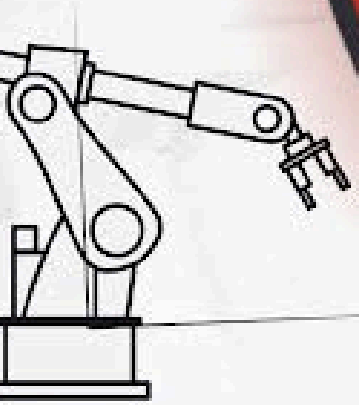

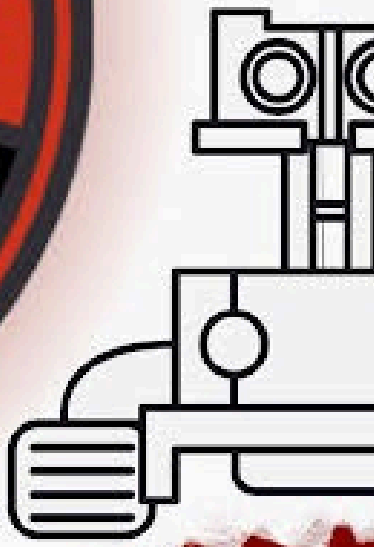

In Association with

SUDHARSANAM VIDYAASHRAM

19TH OCTOBER, 2024
08.00 AM TO 04.00PM

VENUE: POONAMALLEE - AVADI HIGH RD, THIRUVERKADU, AVADI, TAMIL NADU 600077

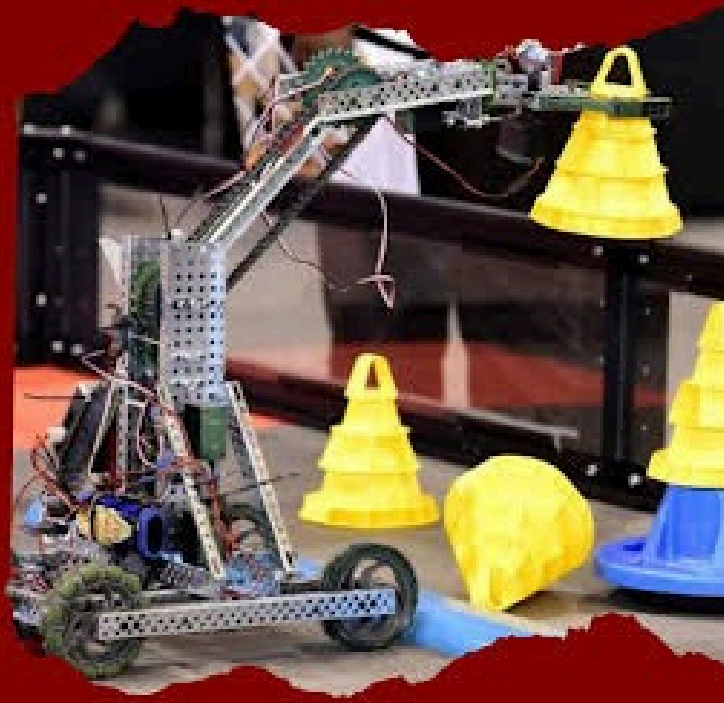

WWW.CYBERBOTS.IN

For Details Contact

+91-9514909991

ZONE 1A GRADE 4-5

CYBER BOTS

PRESENTS

CYBERTRON

COSMIC ODYSSEY RULES

1. Introduction Embark on an interstellar adventure with "Cosmic Odyssey". In this captivating game, students
control robots to navigate a maze and complete crucial repairs on a space station. The mission tests their programming skills, problem solving abilities, and dexterity in a space themed environment. The challenge encourages critical thinking, teamwork, and creativity as students navigate their bots through intricate pathways, avoid obstacles, and complete docking tasks. Successfully completing the mission requires precision, spatial awareness, and careful planning.

2. Mission Briefing

- Objective: Guide your robot through a space station maze to reach the designated repair area.
- Path Assignment: Each player is assigned a unique path by the Command Center. Players must calculate the steps and program their robots to navigate through the maze without crossing pathways or hitting obstacles (asteroids).
- Docking: Players must successfully complete a docking task by playing the buzz game before proceeding to the repair area.
- Completion: Once the bot reaches the correct repair point in the Space Station, it will indicate that the repair is found and successfully completed.

3. Rules and Regulations

- Participants: Four players participate simultaneously, each navigating their robot through the maze.
- Pathway Boundaries: The bot must stay within the designated pathway and avoid crossing into other paths.
- Command Center: Upon reaching the Command Center, the path will be revealed to the player. Players must program their bots accordingly before starting the mission.
- Programming: Players must calculate the steps required for their robot to navigate the maze and program it accordingly. Once the bot leaves the Command Center, no physical interaction with the bot is allowed.
- Asteroid Avoidance: The bot must avoid contact with asteroids (dead ends). If the bot contacts an asteroid, the player must return to the previous checkpoint or the Command Center to restart.
- Docking Point: Upon reaching the docking point, players must accurately navigate to it and complete the docking task by playing the buzz game.
- Buzz Game: The buzz game requires players to maneuver a ring along a wire without touching it. Successful completion allows the player to proceed further.
- Space Station Navigation: After docking, players can navigate within the Space Station to reach the repair area. The bot must reach the repair area accurately to complete the mission.

4. Gameplay Overview

Round 1: Prelims

- **Path Navigation: Players navigate their bots through the maze, ensuring they stay within the pathways.**
- **Asteroid Avoidance: The bot must avoid contact with asteroids. Contact results in restarting from the previous checkpoint.**
- **Docking Point Reach: Players must navigate their bots to the docking point accurately.**
- **Space Station Reach: After docking, players continue navigating within the Space Station to reach the repair area.**
- **Time Limit: 6 minutes max**

Round 2: Mains

- **Enhanced Challenges: Players face new challenges, including an enhanced docking task.**
- **Buzz Game Completion: Players must successfully complete the buzz game before proceeding.**
- **Space Station Navigation: Continue navigation within the Space Station to reach the repair area.**
- **Time Limit: 10 minutes max**

5. Scoring Criteria

Round 1 (Prelims)

- **Path Navigation: 10 points**
- **Asteroid Avoidance: 10 points**
- **Docking Point Reach: 10 points**
- **In-Time Completion: 10 points**
- **Space Station Reach: 10 points**
- **Total for Round 1: 50 points**
-

Round 2 (Mains)

- **Path Navigation: 5 points**
- **Asteroid Avoidance: 10 points**
- **Docking Point Reach: 10 points**
- **Buzz Game Completion: 10 points**
- **In-Time Completion: 5 points**
- **Space Station Reach: 10 points**
- **Total for Round 2: 50 points**

6. Learning Outcomes
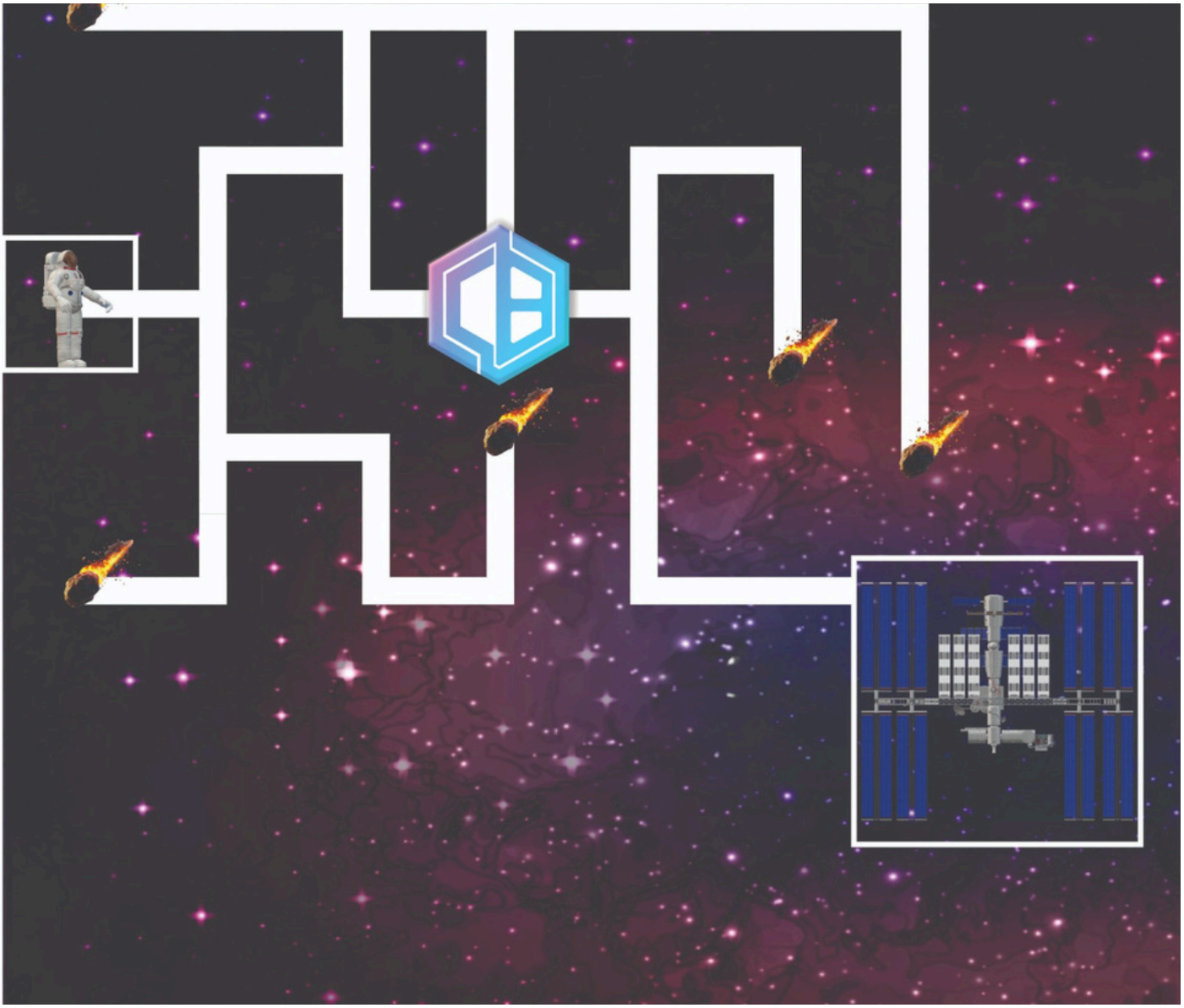
- **Problem Solving: Players practice troubleshooting and problem solving as they navigate through the maze, avoid asteroids, and adapt to new challenges.**
- **Spatial Awareness: The challenge helps students develop spatial awareness by requiring them to visualize and plan their robot's path through the maze.**
- **Precision and Dexterity: Successfully completing the buzz game and accurately navigating to the repair area underscores the importance of precision and fine motor skills in robotics.**