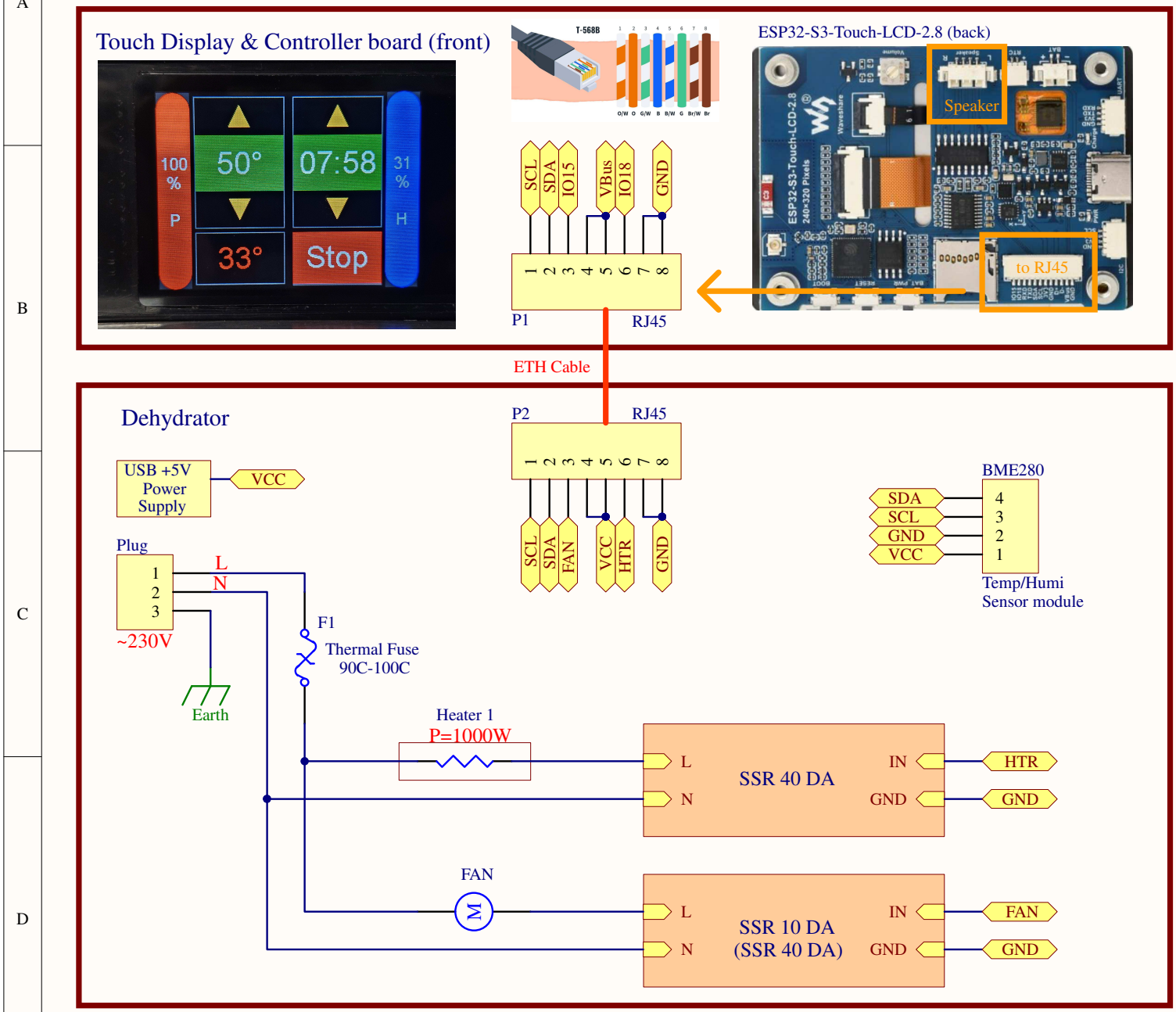Smart Dehydrator
rev1.2