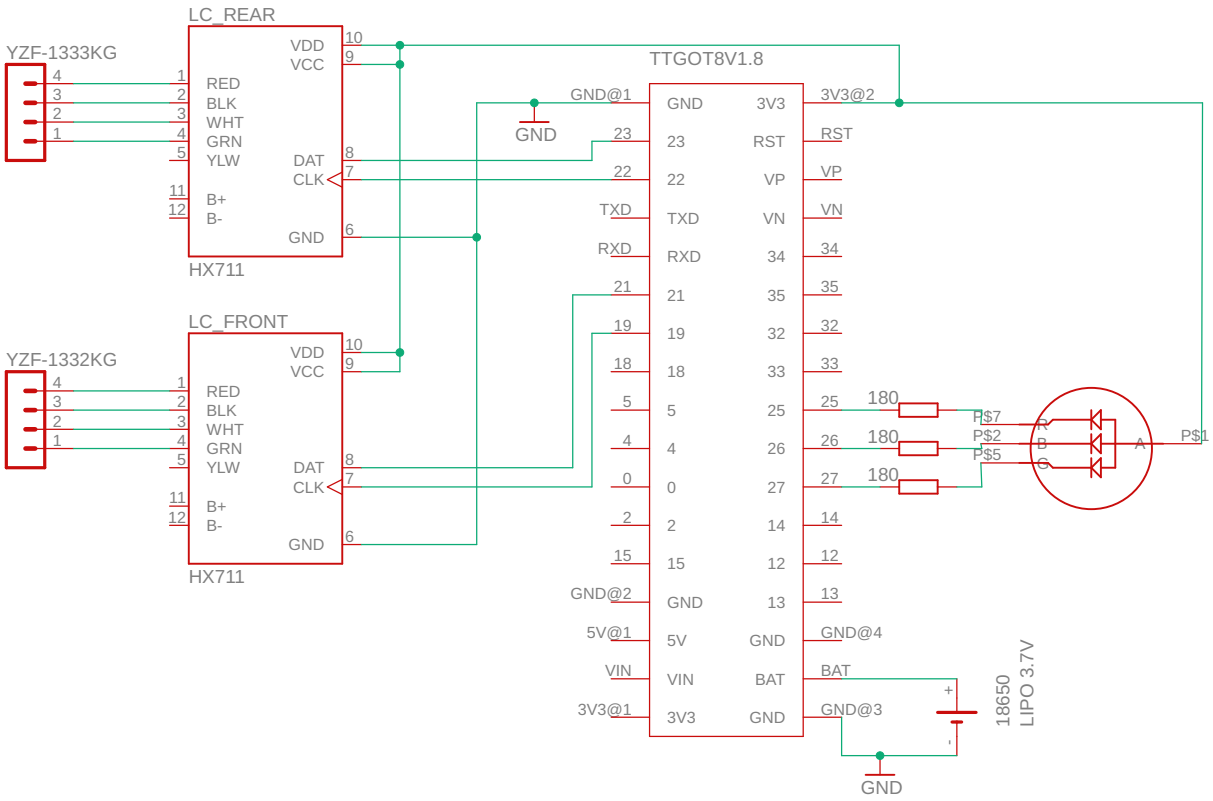

TITLE: CGScale

Document Number:

REV:

Date: 27/03/2024 21:49

Sheet: 1/1