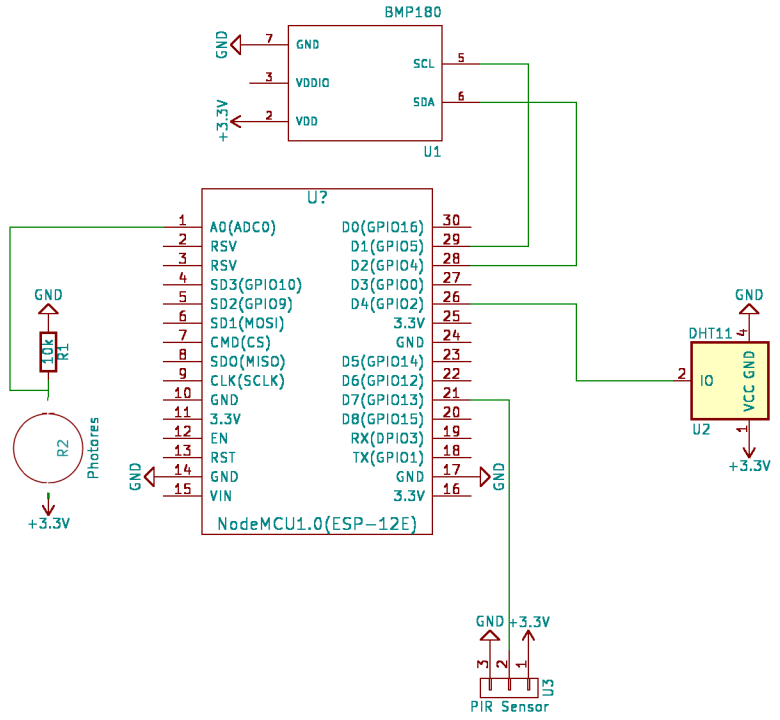

Sheet: /
File: Room Sensor.sch

Title: HA Room Sensor

Size: USLetter	Date: 06/24/2018	Rev:
KiCad E.D.A. kicad (after 2015-mar-04 BZR unknown)-product		Id: 1/1