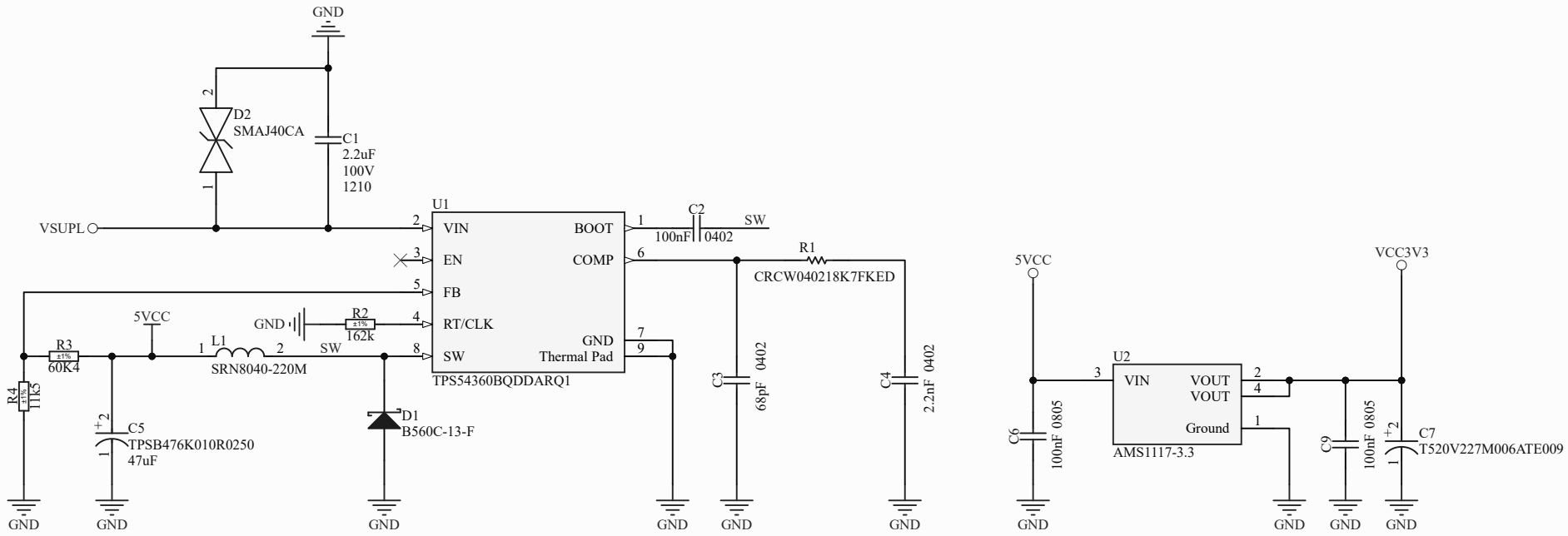

Title		
Size A4	Number	Revision
Date: 5.07.2026		Sheet of
File: D:\AltiumProject\..\24VDC_IN.SchDoc		Drawn By:

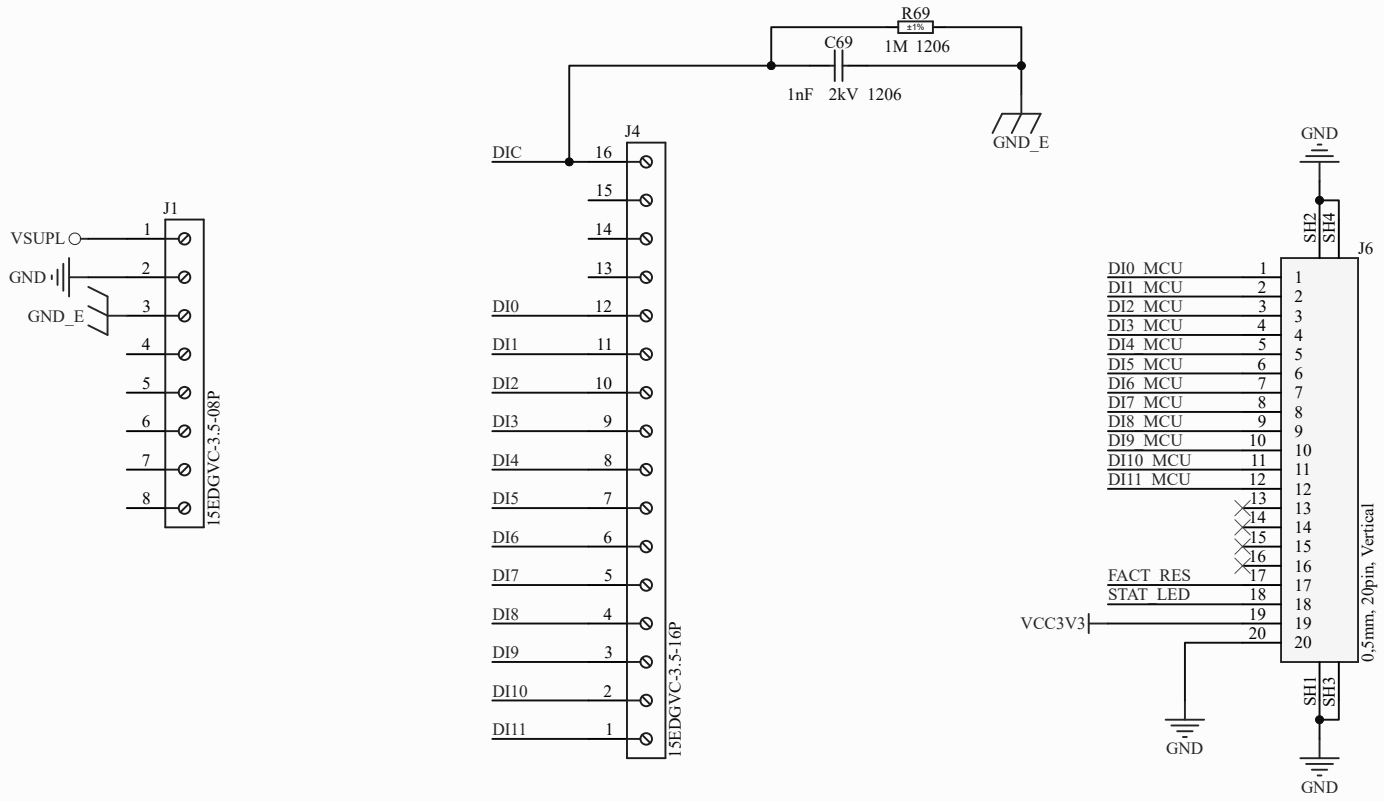

Title		
Size A4	Number	Revision
Date: 5.07.2026	Sheet of	
File: D:\AltiumProject\..\TERMINALS.SchDoc	Drawn By:	

THIS DOCUMENT AND THE DATA DISCLOSED HEREIN OR HEREWITH IS THE PROPERTY OF ALTIUM LIMITED AND MAY BE FREELY DISTRIBUTED IN WHOLE. NO RIGHTS ARE RESERVED OR EXPRESS OR IMPLIED WARANTEE GIVEN.

REVISION	DESCRIPTION	DATE	APPROVED

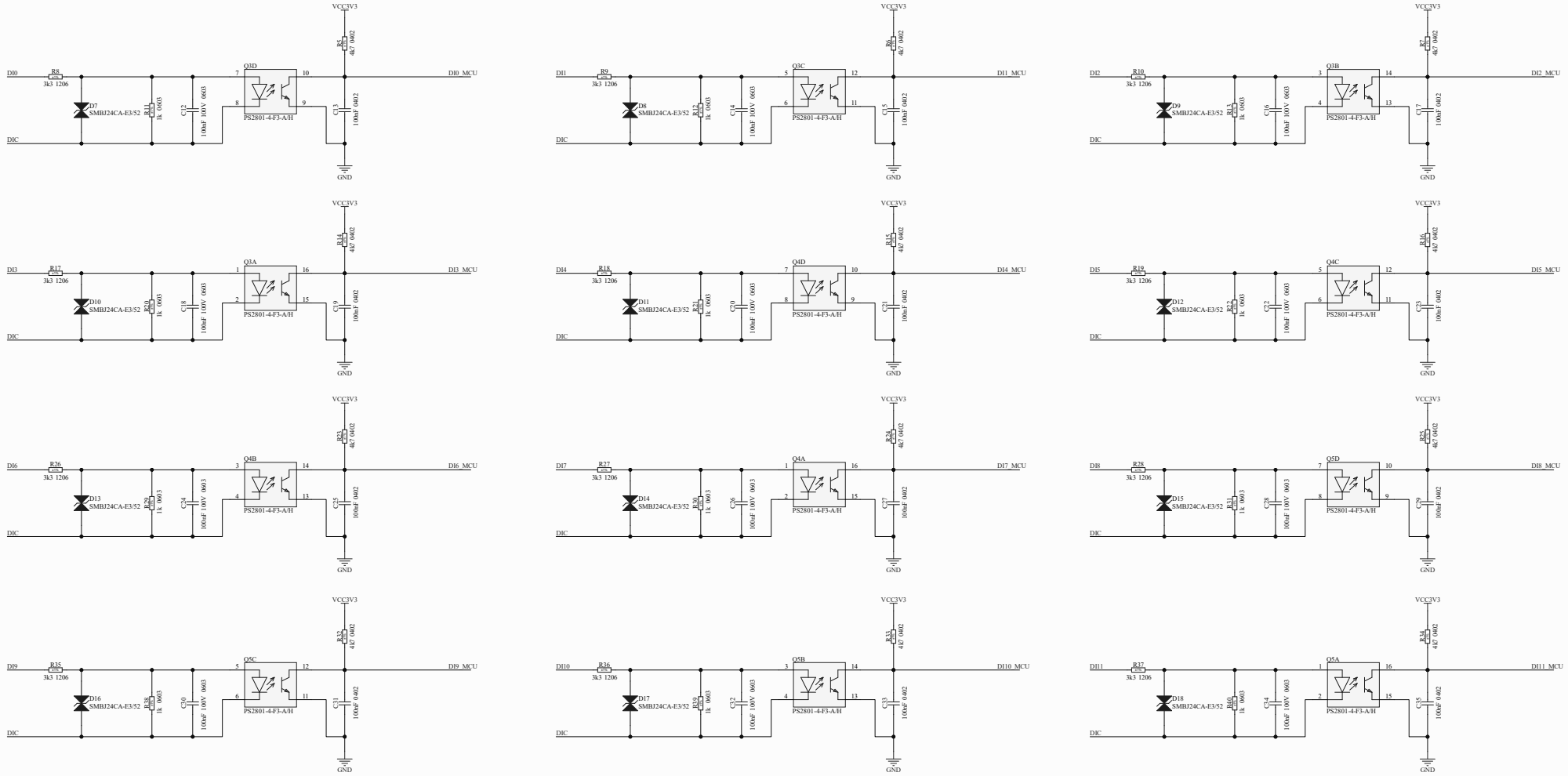

APPROVALS	DATE
ENG:	
DSN:	
CHK:	
REFERENCE DOCUMENTS	
BOM:	
ASSY DWG:	
FAB DWG:	
PCB DWG:	

PROJECT: Altium

PROJECT REVISION: Not in version control | DOCUMENT REVISION: Not in version control | DESIGN ITEM:

TITLE: *

SIZE	CAGE CODE	DWG NO.	REV
A2			

SCALE: | FILE NAME: DI.SchDoc | SHEET 3 OF

THIS DOCUMENT AND THE DATA DISCLOSED HEREIN OR HEREWITH IS THE PROPERTY OF ALTIUM LIMITED AND MAY BE FREELY DISTRIBUTED IN WHOLE. NO RIGHTS ARE RESERVED OR EXPRESS OR IMPLIED WARANTEE GIVEN.

REVISION	DESCRIPTION	DATE	APPROVED

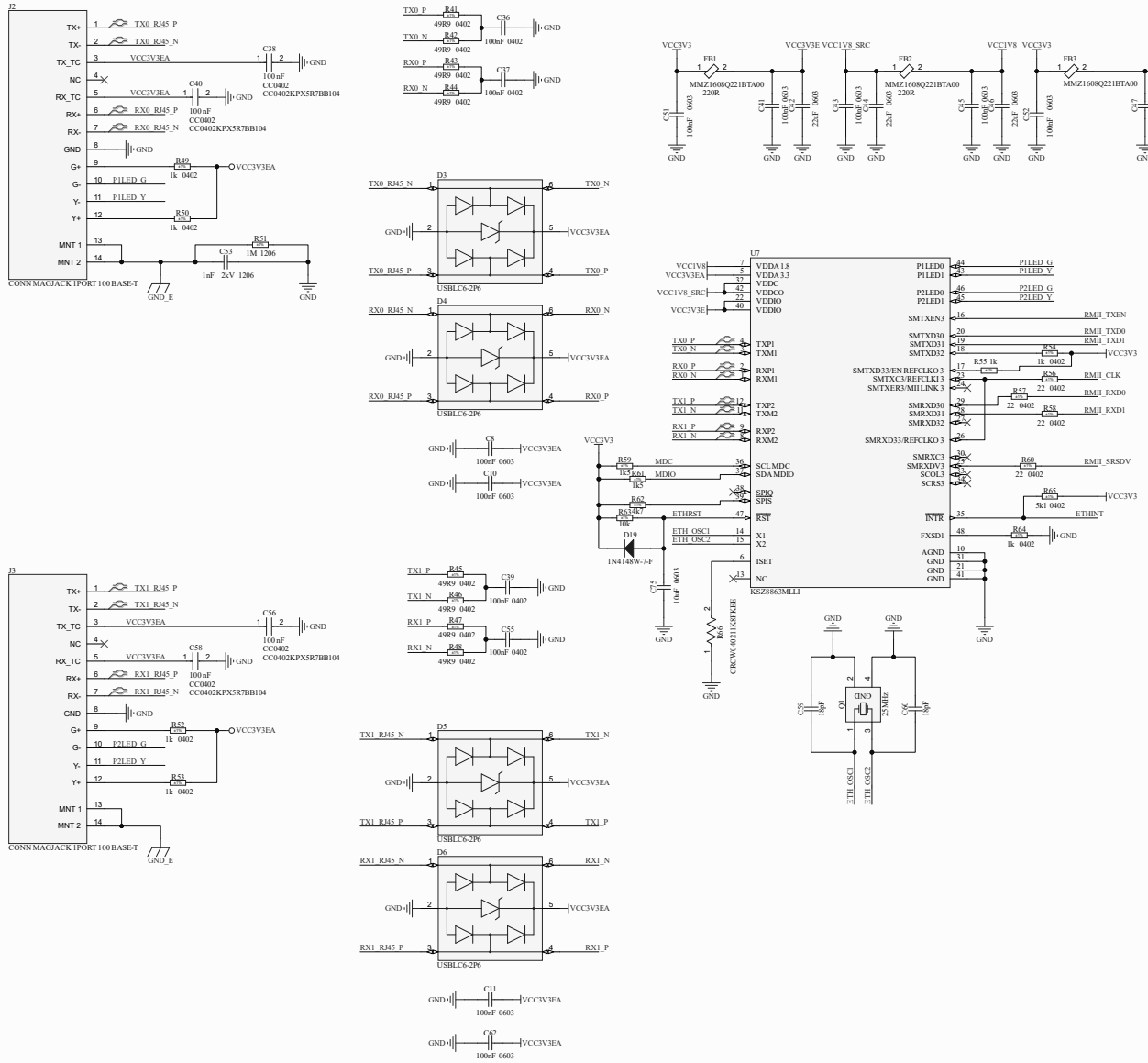

APPROVALS	DATE
ENG:	
DSN:	
CHK:	
REFERENCE DOCUMENTS	
BOM:	
ASSY DWG:	
FAB DWG:	
PCB DWG:	

PROJECT: Altium

PROJECT REVISION: Not in version control | DOCUMENT REVISION: Not in version control | DESIGN ITEM:

TITLE: *

SIZE	CAGE CODE	DWG NO.	REV
A2			

SCALE: | FILE NAME: ETH_3PORT.SchDoc | SHEET 4 OF

THIS DOCUMENT AND THE DATA DISCLOSED HEREIN OR HEREWITH IS THE PROPERTY OF ALTIUM LIMITED AND MAY BE FREELY DISTRIBUTED IN WHOLE. NO RIGHTS ARE RESERVED OR EXPRESS OR IMPLIED WARANTEE GIVEN.

REVISION	DESCRIPTION	DATE	APPROVED

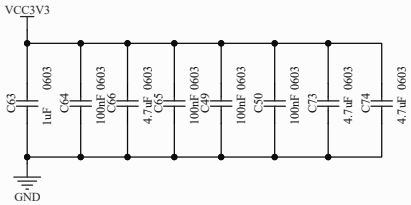

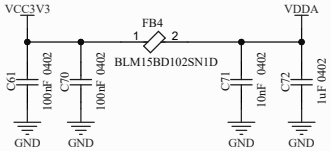

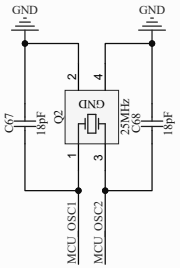

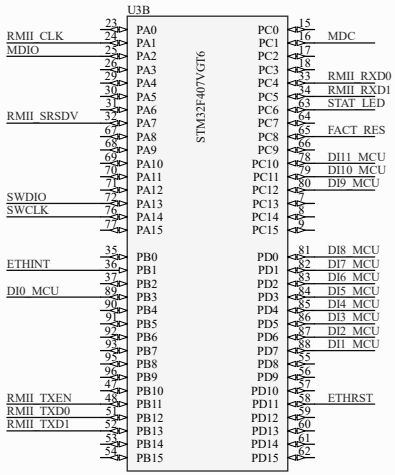

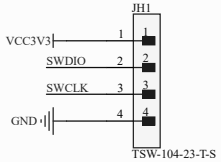

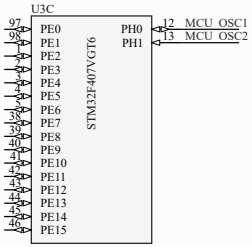

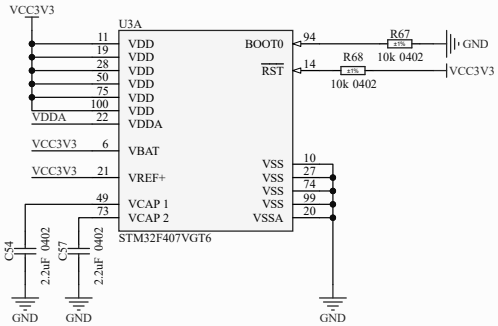

APPROVALS	DATE
ENG: *	
DSN: *	
CHK: *	
REFERENCE DOCUMENTS	
BOM:	
ASSY DWG:	
FAB DWG:	
PCB DWG:	

PROJECT

PROJECT REVISION: Not in version control | DOCUMENT REVISION: Not in version control | DESIGN ITEM:

TITLE *

SIZE	CAGE CODE	DWG NO.	REV
A3			

SCALE: | FILE NAME MCU_STM32F407VGT.SchDoc | SHEET 5 OF 5