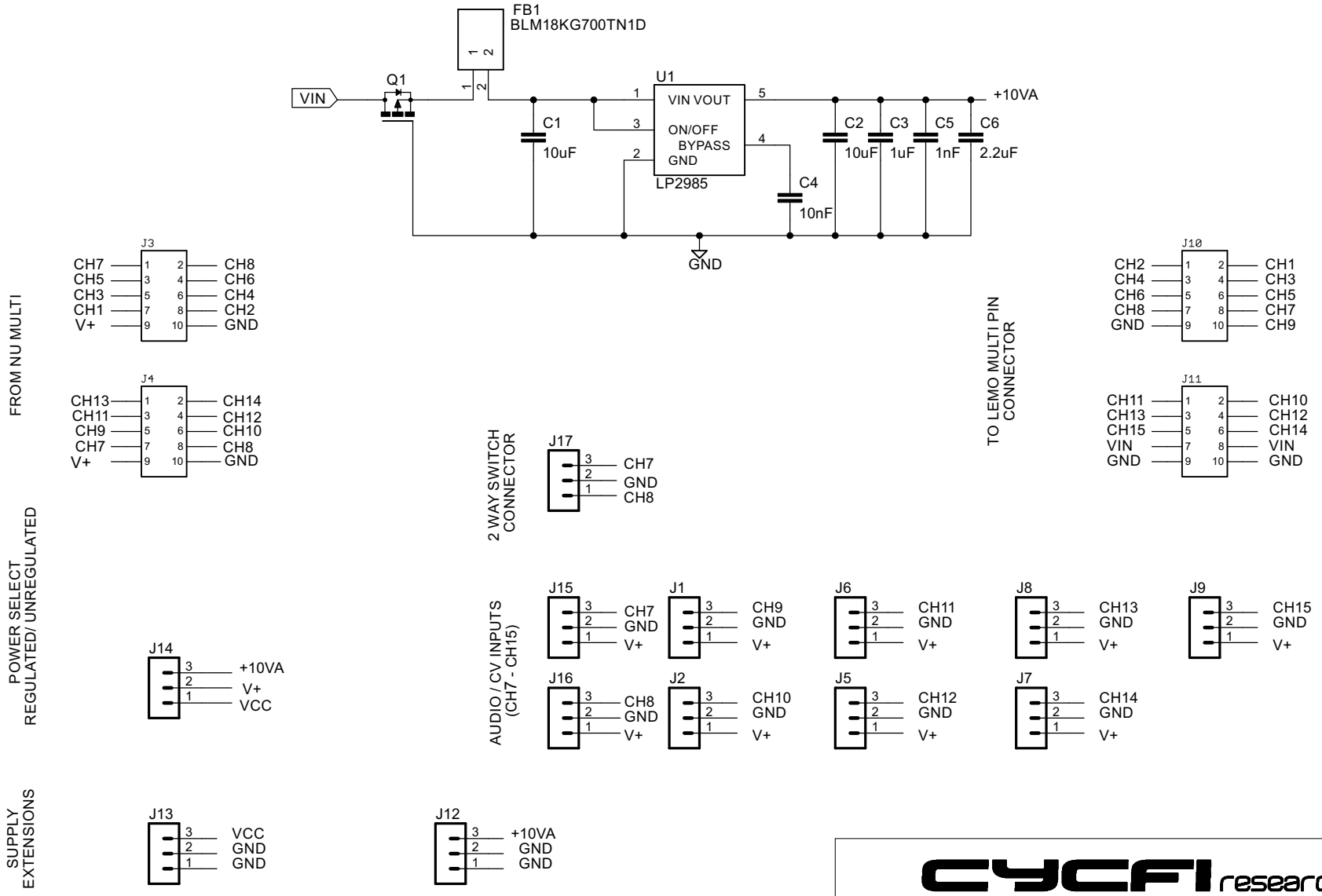


Internal Breakout Project by Cycfi Research is licensed under a
Creative Commons Attribution-ShareAlike 4.0 International License.

Copyright CYCFI Research Inc. 2013-2020

CYCFI research

| | | |
|---|---|---|
| TITLE: | Internal Breakout | |
| Document Number: | | REV: v2.5 |
| Date: 12/29/2015 2:35:25 PM | | Sheet: 1/1 |