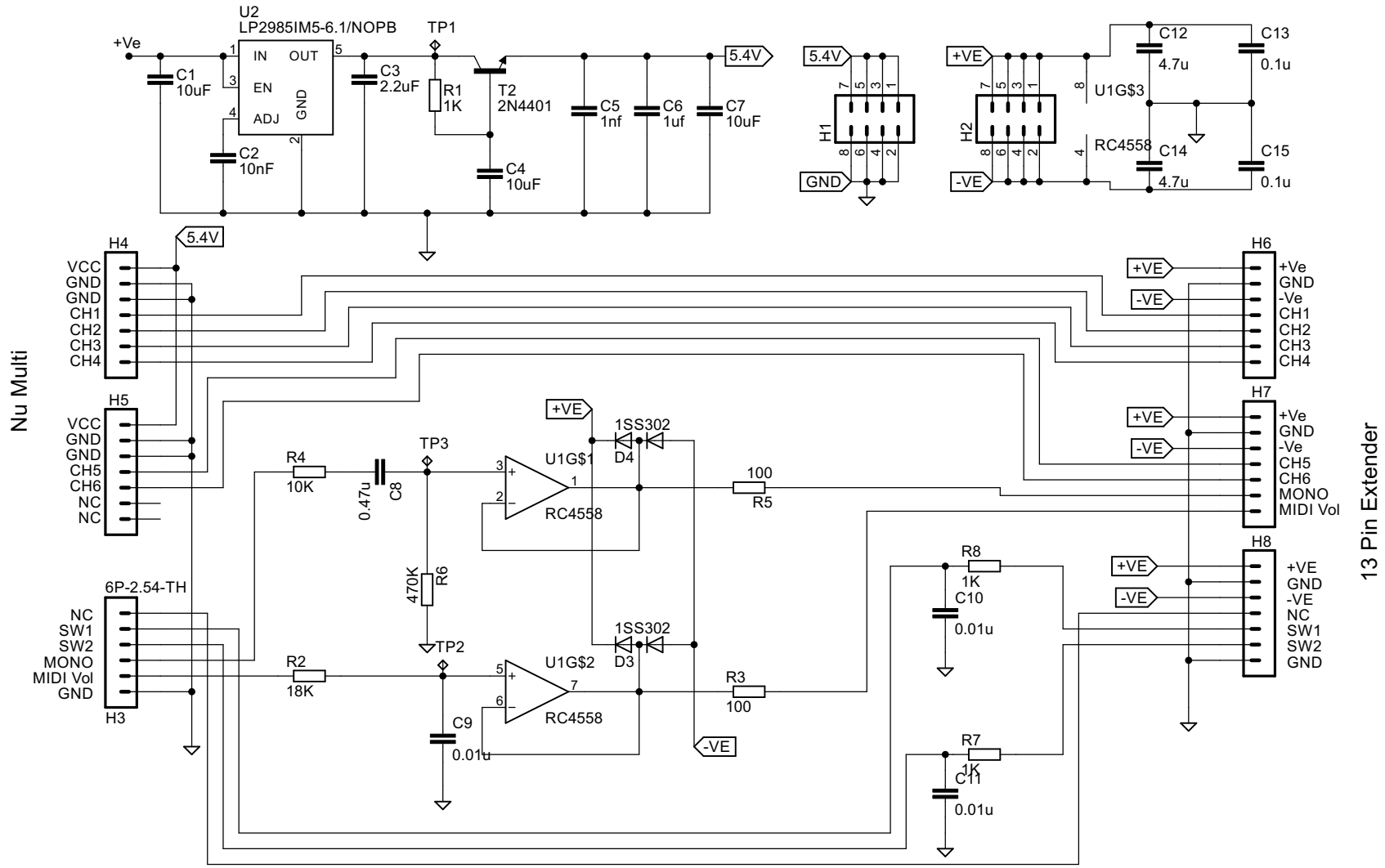

GK Roland Breakout Project by Cycfi Research is licensed under a
Creative Commons Attribution-ShareAlike 4.0 International License.

Copyright CYCFI Research Inc. 2013-2017

TITLE: Internal Breakout Board - GK

Document Number: 201722

REV: 0.9

Date: 2/14/2017 1:17:15 PM

Sheet: 1/1