Modeling Smartphone Images with Human Faces to Discriminate a Selected Face Using Deep Learning

Wycliffe Atswenje Sikolia

A research proposal submitted to the Department of Statistics and Actuarial Science in partial fulfillment of the requirement for the award of the degree of a Post Graduate Diploma in Applied Statistics of Jomo Kenyatta University of Agriculture and Technology.

2023

DECLARATION

This research proposal is my own work and has not been presented elsewhere for a degree award.

Signature .....… Date ….....

Wycliffe Atswenje Sikolia

SCB384-3284/2013

Declaration by supervisors.

This research proposal has been submitted for examination with our approval as university supervisors.

Signature .....……. Date .....……

Dr. Anthony Kibera Wanjoya

Department of Statistics and Actuarial Sciences

Jomo Kenyatta University of Agriculture and Technology

DEDICATION

I dedicate my proposal to my family and friends. I am particularly grateful to my father whose moral support has been instrumental in my studies. My parents financial support and constant encouragement has been key to getting this far. My brothers Melchizedek Emmanuel Makuto, Hassan Chebkos, and Felix Imani have also been encouraging me all the way. I remember visiting them and calling them to laugh my stress of during my studies. My Dad, Dr. Stephen Sikolia's moral support and my friend Ken Macharia's words of positive affirmation gave me the spirit to keep going. My church also played a crucial role in my studies because the church strengthening me spiritually and emotionally. Above all I thank God for giving keeping me healthy and giving me the knowledge to complete my studies.

ACKNOWLEDGMENT

Special regards to my supervisors Dr. Anthony Kibera Wanjoya and …… for believing in me. Their continuous support, insightful comments, and immense knowledge have played a crucial role in this work. Their demand for excellence drove me to give my best in this thesis. My friend Festus Were has also been instrumental because he kept on checking up on me and my work. Our social meetings with Festus gave me several ideas on possible research topics for this proposal. I would also like to thank members of the department of statistics and actuarial sciences from the Jomo Kenyatta University of Agriculture and Technology for their support in my studies.

ABSTRACT

Table of Contents

DECLARATION 2
DEDICATION 3
ACKNOWLEDGMENT 4
ABSTRACT 5
List of Tables 7
List of Figures 8
Chapter One 1
Introduction 1
1.1 Background of Study 1
1.2 Problem Statement 3
1.3 Justification of the study 4
1.4 OBJECTIVES OF THE STUDY 6
1.4.1 General Objective 6
1.4.2 Specific Objectives 6
1.5 Significance of the Study 6
Chapter Two 8
Literature Review 8
2.1 Introduction 8
2.2 Facial Recognition 8
2.2.1 Face Detection 8
2.2.3 Face Identification Approaches 12
2.3 Artificial Neural Networks 15
2.3.1 Neural Network Architectures 17
2.3.1.0 Multiple Layer Neural Network 18
References 25

List of Tables

List of Figures

Chapter One

Introduction

1.1 Background of Study

The emergence of big data has disrupted technology. Critical to the discussion is the fact that data science is one of the best professions of the big data era. As evidenced, Davenport and Patil (2012) published an article arguing that data science is the sexiest job of the century. In a different publication, Vicario and Coleman (2018) mention that data scientists work in industries such as technology, production industries, e-commerce, and even agriculture. Clearly, the need for skilled personnel in data science is growing at an alarming rate, which has resulted in a lot of competition among giant companies in technology. This has led to innovations such as speech recognition (Siri) by apple, image detection by Google, and video recommendation from YouTube. Indeed, giant technology companies are consuming big data to create applications that are revolutionizing the world. These recent innovations prove that data science is growing rapidly and that the world is yet to see additional applications that will consume big data.

The big data era is fueled by gadgets that emit and store huge amounts of data. Examples of such gadgets include the smartphones, laptops, desktops, and IOT devices such as smart watches, and smart refrigerators. Owing to the recent increase in the amount of such data, people today store their extra data in the cloud and external hard drives but some people still store their data in gadgets that produce that data. Critical to the discussion is the fact that smartphones have limited storage spaces implying that smartphone users at times extend their storage to the cloud. Additionally, the huge amount of storage space in smartphones is consumed by images and videos. These images and videos are mostly from social media while some of them come from pictures and videos recorded from smartphones. In short, smartphones produce a considerable amount of data that should be harnessed to make the world a better place.

Indeed, huge technology companies such as Google and Apple have developed world class applications that have enabled them to enjoy a competitive advantage over other companies. These data science applications (from Google and Apple) have been made possible by techniques such as support vector machines, random forests, decision trees, and neural networks. The term neural network refers to a connection of layers composed of units called perceptrons, which is made up of an input layer (the predictor variables), a processing unit, and an output layer (the response variable). The processing unit could comprise one or more hidden layers. That said, deep learning occurs when a neural network is created with more than one hidden layer. Having defined deep learning, it is imperative to highlight that decision trees and support vector machines were more famous than neural networks. However, the neural networks were brought to fame when Geoffrey Hinton et al (2006) developed a neural network that predicted handwritten digits with an accuracy of 98%.

Another field that emerged from deep learning is facial recognition. Lately, the field of facial recognition has attracted a lot of attention from scholars and practitioners. Some of the innovations that have emerged from facial recognition include development of home authentication systems, attendance management systems, security surveillance systems, and emotion recognition systems. Critical to the debate is the fact that different solutions of creating facial recognition systems have been proposed. This owes to the fact that Fu (2021) mentions facial recognition using geometric features, facial recognition based on a template, and model based facial recognition as some of the solutions that are used to create facial recognition systems. Additionally, Ranjan et al., (2020) mentions that the traditional model based facial recognition system relies on one hundred and twenty-eight predictor variables. In summary, facial recognition is a new field that emerged out of deep learning and should be researched further.

1.2 Problem Statement

As already mentioned, deep learning has enabled researchers to develop facial recognition systems. For example, Goel, Mehmood, Ugail (2021) mention solutions such as FaceNet, VGGFACE, VGG16 and VGG19 that are used for facial recognition. In a different paper, Chandra and Reddy (2020) discuss FaceNet, OpenFace, and DeepFace as solutions that could be used for facial recognition. Critical to the discussion is the fact that the mentioned solutions are just but a fraction of solutions that could be used for facial recognition. This is because there are at least thirty papers that have been published each with a different solution for facial recognition. It is imperative to mention that all the publications have been tested on databases that collect images from the west. For instance, the FaceNet algorithm was developed from the Labeled Faces in the Wild dataset which mostly comprises faces from the West. Likewise, the VGGFACE algorithm was developed using the VGG Face Dataset, which the authors caution may not be representative of the global human population (Parkhi, Vedaldi, and Ziseerman, 2015).

Apparently, most of the facial recognition systems that have been developed ignore the fact that Africans and Black Americans need to be included in the development of such systems. This is a crucial point because developing facial recognition systems that include Africans and black Americans would add value to the field of facial recognition. As evidence of this, Najibi (2020) reveals that the existing technologies are subject to racial bias especially against Black Americans. Moreover, Krishnapriya, et al., (2019) conducted a study on racial bias and facial recognition systems and concluded that there is a significant false match rate on faces from Black Americans. Vital to the debate is the reality that some media sources highlight the fact that racial bias in facial recognition is a problem in most facial recognition software. Specifically, Lohr (2018) posits that Google had to apologize because their facial recognition system identified black Americans as gorillas. This indicates that the existing software on facial recognition should be revolutionized to include black faces when developing facial recognition software.

Clearly, most of the solutions that have been developed have focused on the faces of people from the west. That is not all. This owes to the reality that none of the solutions that have been developed focused on images that have been extracted from smartphones. For example, FaceNet was developed using the labeled faces in the wild dataset, whose images were collected from the internet (Schroff, Kalenichenko, and Phiblin, 2015). Similarly, the DeepFace algorithm was developed using three different datasets: - the labeled faces in the wild dataset, the social face classification dataset (Balaban, 2019), and the YouTube faces dataset (Ferrari, Berretti, and Del Bimbo, 2018). Critical to the debate is the fact that the author did not find any facial recognition solution that was solely developed using smartphone images. In short, there is an array of publications on facial recognition but none of the papers based their solution on images that have been developed from Smartphone images.

1.3 Justification of the study

A smartphone could be elucidated as a phone with advanced features such internet connectivity, software usage, and connection to a cellular network. It is imperative to mention that the advanced features on smartphones have made smartphones a household item today.

It is because these features have smartphone applicable cases such as learning, interpersonal communication, entertainment, and even business transactions. Unlike desktop computers and laptops, smartphones are portable, which makes them convenient to use. As a result, smartphones have penetrated the global market like no other device. As evidenced, The United Nations (2021) argues that the current market for laptops is estimated at $102 billion and that of smartphones is estimated at $522 billion. In a different paper, Liu and Ellis (2021) argue that an estimated 6.4 billion people in the entire globe own a smartphone. Finally, The United Nations (2021) argues that the number of smartphone usage in Sub Saharan Africa rose by 28 percentage points between 2014 and 2018.

It is important to highlight that topical smartphones have cameras that are used by their consumers for photography. It is because a smartphone is more affordable and portable than a camera. It follows that smartphone users have the ability of taking pictures without a camera. As evidenced, Saraswathi (2017) conducted a study on smartphone usage among students and established that students like taking pictures using smartphones. Moreover, a study conducted by Mother et al., (2013) reveals that the study population used smartphones mostly to send and receive text messages (97.9%), take pictures (97.1%), play music (96.1%), setting the alarm (95.8%), referring to the calendar (94.5%), recording videos (92.5%), play games (91.9%), and exchanging pictures via Bluetooth (91.7%). This indicates that there is an upsurge in the number of people who are relying on Smartphones to take pictures.

Earlier studies already established that people rely on smartphones for taking pictures but that is not all. This owes to the truth that recent studies also affirm the reality that human beings rely on smartphones for taking pictures. As evidence of this, Dermawi and Tolle (2019) reveal that most downloaded applications from Google Play Store as of August 2018 were in the photography category. Imperative to the debate is the truth that the amount of data that is generated from smartphone pictures and videos is quickly increasing. This is supported by Blahnik and Schindelbeck (2021) who argue that some 2 trillion pictures will likely be taken every year, which is twice as much compared with five years ago and an upwards of 90% of them are taken using smartphones. Clearly, smartphone photography is attracting attention from scholars and practitioners and should be examined with an aim of developing solutions that would add value to smartphone photography.

As already mentioned, the estimated number of Smartphone owners as of 2021 is 6.4 billion and the estimated number of pictures that were taken by smartphones is 2 trillion. Dividing these two figures, we get an estimated 312.5 pictures per smartphone. This number is relatively high. It follows that managing and perusing through images and videos stored in a smartphone could be a

daunting task. Consider a smartphone user with an estimated 5 gigabytes of images and videos, such a person will find it frustrating to scroll through the images and videos looking for pictures and videos belonging to a particular person. In addition, smartphone users tend to have images and videos of their close family members stored. Considering that close family members tend to have resembling faces, it could be difficult to scroll through all pictures of a smartphone looking for a picture of a particular person using a naked eye. In short, researchers should develop tools that can help smartphone users peruse through images and videos efficiently.

1.4 OBJECTIVES OF THE STUDY

1.4.1 General Objective

To create a deep learning model that can detect African faces using smartphone images

1.4.2 Specific Objectives

1. To extract human faces from pictures taken by smartphones and prepare the faces for deep learning.
2. To use convolution neural networks to build a model that can detect African faces given a list of smartphone images.
3. To use artificial neural networks to build a model that can detect African faces given a list of smartphone images.
4. To compare the performance of convolution and artificial neural networks on African faces from smartphone pictures.

1.5 Significance of the Study

Apparently, there is a lot of literature on the subject of facial recognition but that is not enough. This owes to the truth that Marks (2021) cites two cases where people of color were wrongfully arrested because of a racially biased facial recognition system. In a different study, Leslie (2020) argues that racial bias in photographs is a problem that began as early as the 19th century. The same author further mentions that the topical facial recognition systems are still

racially biased. It is also important to note that most of the current facial recognition systems were created from celebrity images but none of them dared to use images collected specifically from Smartphones. It follows that this proposal will contribute to the existing knowledge by creating a facial recognition system using African faces, and images taken specifically by smartphones.

Chapter Two

Literature Review

2.1 Introduction

This section surveys previous works done on facial recognition with a bias towards the objectives of this work. It begins with examining different types of methodologies that have been used for facial recognition before delving into how different types of neural networks have been used for facial recognition. Specifically, this proposal discusses how convolution neural networks, artificial neural networks, and how they have been used for facial recognition.

2.2 Facial Recognition

Facial recognition is a biometric technique used to identify faces and match those faces to a database of faces with an aim of identifying a human being from an image. From the definition, it is clear that face recognition is a two-step process with the first step being face detection and the second step being face identification. The first step of facial recognition (or the face detection step) is identifying and extracting human faces from an image. In this step, all objects in an image are extracted and checked to confirm if a picture contains a human face. If any human face is present in the image, the face is extracted from the image before step two begins. In the second step or the image identification step, an image is compared to faces stored in a database to identify if the face matches the face of a known person. In short, there is a difference between facial detection and facial recognition and that facial recognition begins with facial detection and finalizes with facial identification.

2.2.1 Face Detection

Given an arbitrary image, the objective of facial detection is to establish whether or not there are any faces in the image and if present, return the image location and extent of each face (Yang, Kriegman and Ahuja, 2002). It is important to highlight that there are several methods that could be

used for detecting faces from images. These methods include knowledge based methods, feature invariant approaches, template matching methods, and appearance based methods. Indeed, the mentioned methods are important when detecting faces from images, but all these methods are accompanied by several challenges. This owes to the reality that Yang, Kriegman and Ahuja (2002) list the following five challenges that are associated with facial detection: - pose, occlusion, aging face expression, imaging conditions and image orientation. Moreover, face expression is not only a challenge in face detection but also in face recognition. It follows that researchers on facial recognition should identify methods of tackling the mentioned challenges associated with face detection.

2.2.1.1 Challenges in Face Detection

Pose: A review of images databases will indicate that people like taking images in different poses. It follows that an image is likely to have a face that is twisted to the right, left, or even upside down. Moreover, some features such as the nose, eye, or ears maybe wholly or partially occluded which is an additional challenge in facial recognition. This problem is always solved by rotating images back to an upright position.

Occlusion: Human beings often have features that could affect image detection. For instance, men are known to have beards, which may or may not exist in images. It is also important to highlight that people at times wear spectacles, which also affects face detection. Moreover, COVID 19 forced people to wear masks, which present a unique challenge in facial recognition.

Aging: Human faces are known to change with age progression which presents a challenge in facial recognition. This implies that there would be a significant difference in images if the time difference between the images is large. It is notable that aging will not be a challenge to this paper because people tend to change their smartphones for a few years. It is notable however that Singh and Prasad (2018) propose the use of coupled auto-encoder networks and non-linear analysis as a solution to the aging problem in facial recognition.

Facial expressions: Images of human faces could also be affected by their emotions because people can change their faces based on emotions they are experiencing. Critical to the discussion is the reality that Singh and Prasad (2018) cite expression invariant 3D face recognition as a solution to the problems of facial expressions in image recognition.

Imaging conditions and image orientation: A huge chunk of solutions in computer vision make the assumption that there is a single illuminant lighting in an image. Regardless, that is not always the case. As evidenced, Finlayson and Fredembach (2007) reveal that images always contain shadows depending on the positions from different lights that affect an image. Important to the debate is the truth that Finlayson (2018) proposes a solution to the problems arising from illumination in computer vision.

2.2.2 Face Detection Approaches

2.2.2.1 Knowledge Based Methods of Facial Detection

This method relies on a set of rules to detect whether there is a human face in an image. The method captures the human knowledge of faces and interprets the knowledge into a set of rules. For instance, the face has two symmetric eyes; the eye areas are darker than the cheeks, the distance between eyes, and the difference in colors between the eyes and cheeks. It is notable that using the knowledge base method for face detection could be difficult because it is difficult to develop a set of rules that can correctly identify a human face. This owes to the fact that there could be very many false positives if the rules are too general. Likewise, there could be many false negatives if the rules are too strict. This drawback has hampered researchers from using this technique. However, Chen et al., (2001) used the knowledge based method to detect faces in an image with an accuracy of 94%. One disadvantage with this method is that it is not efficient.

2.2.2.2 The Feature Invariant Approach of Face Detection

The feature invariant method of face detection is a little bit different from the knowledge based method because it uses statistical methods on facial landmarks. Celiktutan, Ulukaya, and Sankur (2013) define a face landmark as a prominent feature that can play a discriminative role or

can serve as anchor points in face detection. Examples of such landmarks include the eye corners, the nose tip, nostril corners, mouth corners, end points of eyebrow arcs, ear lobes, and the chin. This approach works by detecting facial landmarks, texture and skin color before using a statistical model to identify the presence of a face in an image. Critical to the discussion is the reality that different authors have used the feature invariant approach for face detection. For instance, Kapil and Jain (2013) compared texture based to the structure and shape based feature invariant based methods and concluded that the texture based method is more accurate. However, the authors argue that feature invariant based methods are computationally expensive.

2.2.2.3 The Template Based Approach of Face Detection

This method functions to extract facial image features to gain the Euclidean distance value served as input face comparison value of the users' faces stored in the database (Hidayat, Wibowo, Satria, Winursito, 2021). Simply put, the template based approach transforms an image into geometric primitives like curves and points. This is done by identifying distinctive features like the eye, the nose, the chin, and the mouth before measuring their relative positions, widths and other parameters of the distinctive features. Features extracted from an image are then compared to known features of a human face to check whether an image is that of a human face. For further elucidation the eye, nose, mouth and the chin are compared to that of a human face. If the features obtained from the image match those of a human face, then the object in question is declared to be a human face. It is vital to note that Hidayat, et al., (2021) assert that the template approach of facial recognition is known to have a lighter computational load than other methods because it does not require features from the entire face.

2.2.2.4 The Appearance Based Approach of Facial Detection

The idea behind using Appearance methods for face detection relies on the linear algebra concept of subspaces. What is a subspace in linear algebra? A subspace of a vector space V is a subset H of V that has the following three properties:

1. The zero vector of V is in H.

2. For each u and v are in H, u + v is in H. (In this case we say H is closed under vector addition.)
3. For each u in H and each scalar c, cu is in H. (In this case we say H is closed under scalar multiplication.)

Having defined a subspace, it is vital to point out that unlike the template matching algorithm, the appearance based method detects a face taking into account the entire face. As evidenced, Viegas, et al, (2019) mentions that the entire face is used as a raw input. Simply put, an image is converted into a two dimensional data set before subjecting it into a subspace analysis to extract features that are later used to detect faces.

2.2.3 Face Identification Approaches

As already mentioned, facial recognition is a two-step process with the first face being the face detection and the second step being the face identification step. The face identification phase is where facial characteristics are extracted from a detected face and compared to a known face to confirm if the facial characteristics match those of the known face. Evidence from literature suggests that the template approach and the appearance based approaches are not only used in face detection but could also be used in face identification. As evidenced, Proyecto (2010) discusses template matching and the appearance based technique in both face detection and face identification. It is important to highlight that different publications on techniques that are used in face identification exist. Apart from template matching and appearance based methods, statistical approaches are also used in face identification.

2.2.3.1 Template Matching/ Geometric Approaches

The template matching or the geometric approach of facial recognition is similar to the template matching of the face detection step. However, the objective of the facial recognition step is different from the objective in the face identification step. This owes to the reality that the objective of the facial recognition step is to match a face to a known person while the objective in the face

detection step is to identify whether an object in an image is a human face or not. Like in the face detection step, features like the eye, the nose, the chin, and the mouth are extracted from a human face before matching the features in question to a known face. Consider a face *A* belonging to a person *B* and a face *C* belonging to an unknown person. The template matching approach will collect facial characteristics from faces *A* and *C*. These characteristics from the unknown face *C* will be compared to characteristics from the known face *A*. If a match is found, then the decision will be that the unknown face *C* belongs to person *B*.

It is critical that several authors have applied the geometric approach of facial recognition in their studies. For example, Ghimire and Lee (2016) used the approach in question to predict emotions on a sequence of images that were extracted from videos. Specifically, Ghimire and Lee (2016) ran a multi-class AdaBoost algorithm and a support vector machines algorithm on the Cohn-Kanade (CK+) facial expression database and obtained an accuracy of 95.17% and 97.35% respectively. Another example of a study that used the geometric technique of facial recognition is one by Ayo et al., (2021). This owes to the reality that the authors in question used the geometric approach of facial recognition together with the you-only-look-once (YOLO) algorithm to predict age, gender and emotions. In their study, the authors were able to predict gender and emotions with an 80% accuracy. Regardless, Ayo et al., (2021) were not able to predict age accurately and mentioned that accurate age prediction was hampered by the lighting conditions of an image.

2.2.3.2 Appearance Based Methods

Appearance based methods of face identification work the same way they work for face detection with the difference being the purpose of the method. This owes to the fact that the entire face is used to identify a face but with an aim of matching a face to that of a known person. It is important to highlight that this technique could be classified into linear and non-linear methods. Examples of linear methods include principal components analysis, independent component analysis, linear discriminant analysis, and linear regression classifier. Non-linear methods include

kernel principal component analysis, local linear embedding, and kernel linear discriminant analysis. In a nonlinear approach the input image is mapped into higher dimensional space in which the face is simplified and linear. In principal component analysis a number of images are taken using gray levels. Each image is mapped to a long vector of gray levels. Several views of each person are collected in the database during training. During recognition a vector corresponding to an unknown face is compared with all vectors in the database (Viegas et al., 2019).

It is imperative to mention that several authors have investigated the appearance based method for facial recognition. For instance, Struc and Pavesic (2009) examine the performance of appearance based methods subject to different environmental factors and conclude that the linear discriminant analysis produces the best results across different environmental conditions. Wu et al., (2018) also debate appearance based methods of facial recognition by examining facial expressions using the technique in question. The authors controlled for lighting conditions using a histogram equalization technique and a brightness preserving technique and concluded that the brightness preserving technique performs better than the histogram equalization technique. Broti (2019) also examines appearance based methods of facial recognition by discussing the principal components analysis, independent component analysis, linear discriminant analysis methods used in facial recognition. A drawback for this method is that it is challenging to find an efficient combination of dimensionality reduction technique and classifier.

2.2.3.3 Statistical Methods

In this method, the objective is to create a model that would use a set of variables to predict whether or not a face belongs to a known person. This is done by converting an image into a set of features that are later used for building a statistical model. To further the debate, the number of features that are used for creating models is usually high. It follows that the right statistical tool should be used in order to control for the high number of variables. According to Proyecto (2010) a combination of different tools are at times used in order to create a good model for facial

recognition. It is notable that some of the existing solutions that are used to predict the faces include neural networks with Gabor filters, neural networks with hidden markov models, and fuzzy neural networks. That is not all. At times, principal components analysis, linear discriminant analysis, independent component analysis is used together with other tools in order to control for the number of features used to create a model.

Arrays of studies that use statistical methods for facial recognition have been published. To begin with, Xu et al., (2016) used the Gabor wavelet and neural networks for facial recognition and obtained an accuracy of 93% in their study. In a different publication, Singh and Singh used the Gabor wavelet transform for extracting features and neural networks for model creation and concluded that dimension reduction should be used to reduce execution time and memory space. Saxena et al., (2018) used artificial neural networks with the hidden markov model and demonstrated that the combination of hidden markov models with neural networks performs better than a pure hidden markov model. In a different paper, Soni and Shukla (2020) used convolutional neural networks with hidden markov models and created a facial recognition model that is 99.5% accurate. Finally, Pankaj and Wilscy (2011) used a fuzzy neural network for facial recognition on the AT & T and the Yale database and obtained an accuracy of 98.75% and 99.39% respectively.

2.3 Artificial Neural Networks

Artificial neural networks is a machine learning technique that tries to imitate the intelligence of a human brain. The human brain contains neurons that are connected to one another through axons and dendrites. The connecting region between axons and dendrites is called a synapse. The strength of synaptic connections often changes due to changes in external stimuli, which in turn influence how learning occurs in the human brain. Like biological neurons, artificial neural networks contain computational units called neurons. These computational units are connected to one another through weights that perform the same role as synapses in biological neurons. An artificial neural network computes a function of the inputs by propagating the

computed values from the input neurons to the output neuron(s) and using the weights as intermediate parameters. Learning occurs by changing the weights connecting the neurons.

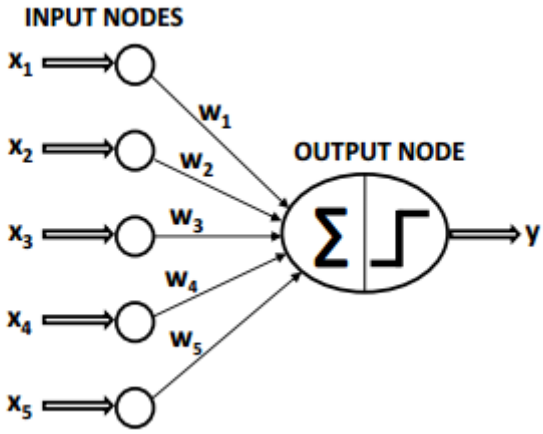

The simplest form of a neural network is called a perceptron and includes a single input layer, an activation function, and the output layer. Consider the image shown in figure 1.0 above and the case of a binary response variable (Y) with 1 is the presence of an observed parameter and 0 the absence of the observed parameter. The input layer contains predictor variables (X_1, X_2, … X_n) with weights (W_1, W_2, … W_n), which are mapped to the output node Y using an activation function. The activation function takes in the computed probability of the function of the weights W_i and predictor variable X_i and produces a probability of the response variable being 1 or 0. The activation function then takes the predicted probability and produces an output 1 if the predicted probability is close to 1 and produces an output 0 if the predicted probability is close to 1. It follows that the perceptron neural network can be computed using the formula shown below.

$$\hat{Y} = \sum_{i=0}^{n} W_i X_i$$

While the above equation may work in a variety of settings, there are instances where we need to introduce a bias to a neural network for it to work accordingly. The mentioned bias could be compared to penalizing a regression model. Basically, we introduce a bias neuron that shifts the line of fit to the right or left depending on the original position of the line of fit. Another way to think

about biases is simply by considering any linear function, y = mx + b. Let's say you are using y to approximate some linear function z. If z has a non-zero z-intercept, and you have no bias in the equation for y (i.e. y = mx), then y can never perfectly fit z. Similarly, if the neurons in your network have no bias terms, then it can be harder for your network to approximate some functions. The figure below shows an example of neural network architecture with a single bias neuron.

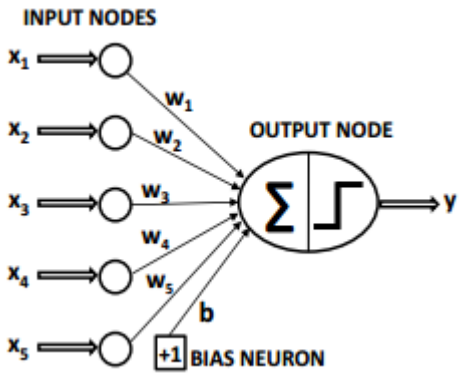

Thus, the perceptron of a single layer neural network is shown in the formula below. The output is represented by $\hat{Y}$, which is equal to the sum of weight W (W_1, W_2… W_n) multiplied by the predictor variables X(X_1, X_2… X_n) plus the bias neuron b.

$$\hat{Y} = \sum_{i=1}^{n} W_i X_i + b$$

2.3.1 Neural Network Architectures

The single layer neural network architecture is the basis of neural networks and has already been discussed in the introductory section of neural networks. Other neural network architectures include the multiple layer neural network, radial basis functions neural networks, restricted Boltzmann machines, the convolution neural network, and the recurrent neural network, However, the multilayer neural network (ANN), and the convolution neural network will be discussed in this paper because those are some of the tools the researcher will be using in this study.

2.3.1.0 Multiple Layer Neural Network

As the title suggests a multilayer neural layer architecture is formulated when two or more networks are used to develop a neural network. A multilayer neural network consists of an input layer, which feeds in data to the first layer of the neural network. The first layer then feeds in data to at least one additional layer before sending the results to an output layer (for a case of a neural network with two layers). It is important to highlight that the training process of a multilayer neural network involves the backpropagation algorithm or the generalized Delta rule (Da Silva et al., 2017). The backpropagation algorithm is best described as follows: The multilayer neural network begins by setting random weights during the first pass across the neurons. Upon reaching the output of the neuron, the weights are compared to the actual output and readjusted accordingly until the predicted value of the neuron is close to the actual value.

2.3.1.0.1 Deriving the Backpropagation Algorithm

Let W_{ji}^{L} be the weight matrices denoting the value of the synaptic weight that connects the jth neuron of layer (L) to the ith neuron of layer (L − 1). Consider the image in the figure below

I. $W_{ji}^{(3)}$ Is the synaptic weight connecting the jth neuron of output layer to the ith neuron of layer 2.

II. $W_{ji}^{(2)}$ Is the synaptic weight connecting the jth neuron of hidden layer 2 to the ith neuron of layer 1.

III. $W_{ji}^{(1)}$ Is the synaptic weight connecting the jth neuron of hidden layer 1 to the ith signal of the input layer.

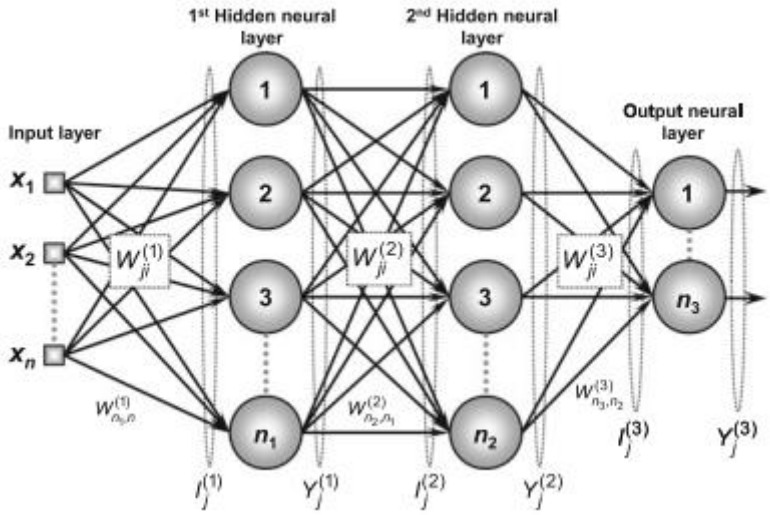

Let I_j^L be vectors whose elements denote the weighted inputs of the jth neuron of layer L and are defined as the following.

$$I_j^1 = \sum_{i=0}^{n} W_{ji}^1 * x_i \leftrightarrow I_j^1 = W_{1,0}^1 * x_0 + W_{1,1}^1 * x_1 + \cdots + W_{1,n}^1 * x_n \tag{2.0}$$

$$I_j^2 = \sum_{i=0}^{n1} W_{ji}^2 * y_i^1 \leftrightarrow I_j^2 = W_{1,0}^2 * y_0^1 + W_{1,1}^2 * y_1^1 + \cdots + W_{1,n1}^2 * y_{n1}^1 \tag{2.1}$$

$$I_j^3 = \sum_{i=0}^{n2} W_{ji}^3 * y_i^2 \leftrightarrow I_j^3 = W_{1,0}^3 * y_0^2 + W_{1,1}^3 * y_1^2 + \cdots + W_{1,n1}^3 * y_{n2}^2 \tag{2.2}$$

Let Y_j^L be vectors whose elements denote the output of the jth neuron related to the layer L and are defined as:

$$Y_j^1 = g\left(I_j^1\right) \tag{2.3}$$

$$Y_j^2 = g\left(I_j^2\right) \tag{2.4}$$

$$Y_j^3 = g(I_j^3) \tag{2.5}$$

Another important aspect of the backpropagation is the chain rule, which is defined as: $\frac{d}{dx}\,[f(g(x))] = f'(g(x)) * g'(x)$. The next step of deriving the backpropagation algorithm involves defining a function that can represent the approximation error. It is important to highlight that this function will measure the deviation between the actual values and the predicted values. As a result the squared error function is employed to measure the deviation in question. This error function will be defined as follows.

$$E(k) = \frac{1}{2}\sum_{j=1}^{n3}\left(d_j(k) - y_j^3(k)\right)^2 \quad (2.6)$$

Where $y_j^3(k)$ is the value produced by the jth output neuron of the network for the kth training sample, while $d_j(k)$ is the corresponding desired value. If there are p training samples the performance of the backpropagation algorithm would be calculated using the mean squared error defined by

$$E_m = \frac{1}{p}\sum_{k=1}^{p} E(k) \quad (2.7)$$

Where $E(k)$ is the squared error obtained in equation 2.6. In order to communicate the derivation of the backpropagation algorithm the process will be divided into two parts. The first part will focus on the synaptic adjustment of weight matrix $w_{ji}^{(3)}$, which represents the output layer. The second part will focus on adjusting intermediate layers $w_{ji}^{(2)}$ and $w_{ji}^{(1)}$.

Adjusting the Synaptic Weights of the Output Layer

Prior to diving into the mathematics of deriving the backpropagation algorithm, it should be noted that the purpose of the training process in output layer is to minimize the error between predicted and actual values. This will be achieved by minimizing the difference between the predicted and actual values. In short, the objective is to obtain an optimal w* so that the squared error {E(w*)} of the whole sample set is as low as possible. Using the chain rule we differentiate equation 2.6 as shown below.

$$\nabla E^3 = \frac{\partial E}{\partial W_{ji}^{(3)}} = \frac{\partial E}{\partial Y_j^{(3)}} * \frac{\partial Y_j^{(3)}}{\partial I_j^{(3)}} * \frac{\partial I_j^{(3)}}{\partial W_{ji}^{(3)}} \quad (2.8)$$

$$\frac{\partial I_j^{(3)}}{\partial W_{ji}^{(3)}} = Y_i^{(2)}$$ (Obtained from the partial derivative of equation 2.2 with respect to W_{ji}) (2.9)

$$\frac{\partial Y_j^{(3)}}{\partial I_j^{(3)}} = g'\left(I_j^{(3)}\right)$$ (Obtained from equation 2.5) (2.10)

$$\frac{\partial E}{\partial Y_j^{(3)}} = -\left(d_j - Y_j^{(3)}\right)$$ (Obtained from equation 2.6) (2.11)

Where g' denotes the first order derivative of the activation function. Replacing equations 2.9, 2.10 and 2.11 in equation 2.8 we get:

$$\frac{\partial E}{\partial W_{ji}^{(3)}} = -\left(d_j - Y_j^{(3)}\right) * g'\left(I_j^{(3)}\right) * Y_i^{(2)} \tag{2.12}$$

Let $\delta_j^3 = -\left(d_j - Y_j^{(3)}\right) * g'\left(I_j^{(3)}\right)$ and ŋ be the learning rate. (2.13)

Also, note that the direction of the weight $W_{ji}^{(3)}$ matrix must be made in the opposite direction of the gradient because the optimization goal is to minimize the squared error (Da Silva et al., 2017).

$$\Delta W_{ji}^{(3)} = -\eta * \frac{\partial E}{\partial W_{ji}^{(3)}} \leftrightarrow \Delta W_{ji}^{(3)} = \eta * \delta_j^{(3)} * Y_i^{(2)} \tag{2.14}$$

Equation 2.13 can also be written as

$$W_{ji}^{current} = W_{ji}^{previous} + \eta * \delta_j^{(3)} * Y_i^{(2)} \tag{2.15}$$

In short, we have shown through equation 2.14 that the neuron adjusts weights of the output layer by considering the difference the observed values and the actual values.

Adjusting the Synaptic Weights of the Intermediate Layers

Unlike the neurons in the output layer, neurons in the intermediate layers do not have access to the actual values. It follows that adjustments in the intermediate layers rely on neurons in the aftermost layers for feedback.

Adjusting the synaptic weights of the second hidden layer

In order to train the second neural layer we need to adjust the weight matrix $W_{ji}^{(2)}$ so as to minimize the error between outputs produced by the network and the adjustment produced in the output layer.

$$\nabla E^3 = \frac{\partial E}{\partial W_{ji}^{(2)}} = \frac{\partial E}{\partial Y_j^{(2)}} * \frac{\partial Y_j^{(2)}}{\partial I_j^{(2)}} * \frac{\partial I_j^{(2)}}{\partial W_{ji}^{(2)}} \tag{2.16}$$

$\frac{\partial I_j^{(i)}}{\partial W_{ji}^{(i)}} = Y_i$ (Obtained from the partial derivative of 2.1 with respect to W_{ji}) (2.17)

$\frac{\partial Y_j^{(2)}}{\partial I_{ji}^{(2)}} = g'(I_j^{(2)})$ (Obtained from equation 2.4) (2.18)

$$\frac{\partial E}{\partial Y_j^{(2)}} = \sum_{k=1}^{n3} \frac{\partial E}{\partial I_j^{(3)}} * \frac{\partial I_k^{(3)}}{\partial Y_j^{(2)}} = \underbrace{\sum_{k=1}^{n3} \frac{\partial E}{\partial I_k^{(3)}}}_{parcel(i)} * \underbrace{\frac{\partial \sum_{k=1}^{n3} W_{kj}^{(3)} * Y_j^{(2)}}{\partial Y_j^{(2)}}}_{parcel\ (ii)} \tag{2.19}$$

Note that the partial derivative of parcel (ii) with respect to $Y_j^{(2)}$ is the value of $W_k^{(3)}$. Thus equation 2.18 becomes:

$$\frac{\partial E}{\partial Y_j^{(2)}} = \underbrace{\sum_{k=1}^{n3} \frac{\partial E}{\partial I_k^{(3)}}}_{parcel(i)} * \underbrace{W_{kj}^{(3)}}_{parcel(ii)} \tag{2.20}$$

The value of parcel (ii) in equation 2.19 represents the synaptic weight of neurons from the output layer that is connected to the neuron j of the second intermediate layer. Also, the weights $W_{ji}^{(3)}$ have been adjusted in the previous step based on errors, which will be used to adjust weights in the second intermediate layer. Moving on to parcel (i) in equation 2.19, the result can be simplified by multiplying equations 2.10 and 2.11 together, which results in the actual value of δ_j^3 defined above. Thus, substituting appropriately equation 2.19 becomes

$$\frac{\partial E}{\partial Y_j^{(2)}} = -\sum_{k=1}^{n3} \delta_k^3 * W_{kj}^{(3)} \tag{2.21}$$

Substituting equations 2.16, 2.17, and 2.20 in equation 2.15

$$\frac{\partial E}{\partial Y_j^{(2)}} = -\left(\sum_{k=1}^{n3} \delta_k^{(3)} * W_{kj}^{(3)}\right) * g'\left(I_j^{(2)}\right) * Y_i^{(1)} \tag{2.22}$$

Da Silva et al., (2017) posit that the adjustment of the weight matrix $W_{ji}^{(2)}$must be made in the opposite direction of the gradient in order to minimize the error. Thus:

$$\Delta W_{ji}^{(2)} = -\eta * \frac{\partial E}{\partial W_{ji}^2} \leftrightarrow \Delta W_{ji}^{(2)} = \eta * \delta_j^{(2)} * Y_i^{(1)} \tag{2.23}$$

Where

$$\delta_j^{(2)} = -\left(\sum_{k=1}^{n3} \delta_k^{(3)} * W_{kj}^{(3)}\right) * g'\left(I_j^{(2)}\right) \tag{2.24}$$

Equation 2.23 can also be written as

$$W_{ji}^{(2)}(t+1) = W_{ji}^{(2)}(t) + \eta * \delta_j^{(2)} * Y_i^{(1)} \tag{2.25}$$

In short, we have shown that that equation 2.24 adjusts weights from neurons in the second hidden layer by considering backpropagation errors originating from the neurons in the output layer.

Adjusting the synaptic weights of the first hidden layer

The objective of the training process of the first hidden layer consists of adjusting the weight matrix $W_{ji}^{(1)}$ in order to minimize the error between the output produced by the network and the backpropagated error originating from the adjustment of the neurons in the second hidden layer. Thus, we have:

$$\nabla E^{(1)} = \frac{\partial E}{\partial W_{ji}^{(1)}} = \frac{\partial E}{\partial Y_j^{(1)}} * \frac{\partial Y_j^{(1)}}{\partial I_j^{(1)}} * \frac{\partial I_j^{(1)}}{\partial W_{ji}^{(1)}} \tag{2.26}$$

$$\frac{\partial I_j^{(1)}}{\partial W_{ji}^{(1)}} = X_i \text{ (Obtained from the partial derivative of 2.0 with respect to } W_{ji}) \tag{2.27}$$

$$\frac{\partial Y_j^{(1)}}{\partial I_{ji}^{(1)}} = g'(I_j^{(1)}) \text{ (Obtained from equation 2.3)} \tag{2.28}$$

$$\frac{\partial E}{\partial Y_j^{(1)}} = \sum_{k=1}^{n2} \frac{\partial E}{\partial I_j^{(2)}} * \frac{\partial I_k^{(2)}}{\partial Y_j^{(1)}} = \underbrace{\sum_{k=1}^{n2} \frac{\partial E}{\partial I_k^{(2)}}}_{parcel(i)} * \underbrace{\frac{\partial \sum_{k=1}^{n2} W_{kj}^{(2)} * Y_j^{(1)}}{\partial Y_j^{(1)}}}_{parcel\ (ii)} \tag{2.29}$$

Note that the partial derivative of parcel (ii) with respect to $Y_j^{(2)}$ is the value of $W_k^{(2)}$. Thus, equation 2.29 becomes:

$$\frac{\partial E}{\partial Y_j^{(1)}} = \underbrace{\sum_{k=1}^{n2} \frac{\partial E}{\partial I_k^{(2)}}}_{parcel(i)} * \underbrace{W_{kj}^{(2)}}_{parcel(ii)} \tag{2.30}$$

The value of parcel (ii) in equation 2.30 relates to the synaptic weights of neurons from the second hidden layer. It is important to emphasize that all the weights of $W_{ji}^{(2)}$ were adjusted in the previous step based on the backpropagated errors from the adjustment of the weights of $W_{ji}^{(2)}$, which in turn were adjusted based on the real values of the error. Parcel (i) in equation 2.30 can be obtained by multiplying equations 2.18 and 2.19, which will result in the value of $\delta_j^{(2)}$ obtained in equation 2.24.

Making appropriate substitutions equation 2.29 becomes

$$\frac{\partial E}{\partial Y_j^1} = -\sum_{k=1}^{n2} \delta_k^{(2)} * W_{kj}^{(2)} \tag{2.31}$$

Substituting equations 2.27, 2.28 and 2.31 in 2.26 in equation 2.26 we get

$$\frac{\partial E}{\partial W_{ji}^{(1)}} = -\left(\sum_{k=1}^{n2} \delta_k^{(2)} * W_{kj}^{(2)}\right) * g'\left(I_j^{(1)}\right) * X_i \tag{2.32}$$

In short, the adjustment of the weight matrix $W_{ji}^{(1)}$ should be made in the opposite direction of the gradient in order to minimize the error.

$$\Delta W_{ji}^{(1)} = -\eta * \frac{\partial E}{\partial W_{ji}^{(1)}} \leftrightarrow \Delta W_{ji}^{(1)} = \eta * \delta_j^{(i)} * X_i \tag{2.33}$$

Where

$$\delta_j^{(1)} = -\left(\sum_{k=1}^{n2} \delta_k^{(2)} * W_{kj}^{(2)}\right) * g'\left(I_j^{(i)}\right) \tag{2.34}$$

Equation 2.34 can also be written as

$$W_{ji}^{(1)}(t+1) = W_{ji}^{(1)}(t) + \eta * \delta_j^{(1)} * X_i^{(1)} \tag{2.35}$$

Therefore, expression (2.35) adjusts the weight of the neurons from the second hidden layer, using the backpropagation of the error originated from the neurons of the output layer.

References

Agrawal, A. K., Singh, N. Y. (2015). Evaluation of Face Recognition Methods in Unconstrained Environments. *International Conference on Intelligent Computing, Communication & Convergence*. Bhubaneswar, Odisha, India. https://www.sciencedirect.com/science/article/pit/S1877050915006560

Ayo, F. M., Mustapha, M., Braimah, A. J., and Aina, A. D. (2021). Geometric Analysis and YOLO Algorithm for Automatic Face Detection System in a Security Setting. *Journal of Physics*, 2199 (2022), 1-10. https://doi:10.1088/1742-6596/2199/1/012010

Balaban, S. (2019). *Deep learning and face recognition: the state of the art.* Retrieved from: https://arxiv.org/pdf/1902.03524v1.pdf

Blahnik, V. & Schindelbeck, O. (2021). Smartphone Imaging Technology and its Applications. *Advanced Optical Technologies, 10(3), 145-232*. https://doi.org/10.1515/sot-2021-0023

Brunelli, R., and Poggio, T. (2013). Face Recognition through Geometrical Features. Retrieved from: https://www.semanticscholar.org/paper/Face-Recognition-through-Geometrical-Features-Brunelli-Poggio/4748b4836011f0af46fcd6e1192e42d03bd5c1cb

Celiktutan, O., Ulukaya, S., and Sankur, B. (2013). A Comparative Study of Face Landmarking Techniques. *EURASIP Journal on Image and Video Processing*, 3(2013). https://doi.org/10.1186/1687-5281-2013-13

Chandra, B. Y. and Reddy G. K. (2020). A Comparative Analysis of Face Recognition Models on Masked Faces. *International Journal of Scientific & Technology Research*, 9(10):175-178.

Chen, L., Mark, H., Lin, J., and Han, C. (2001). Why Recognition in A Statistics-Based Face Recognition System Should be based on The Pure Face Portion: A Probabilistic Decision-Based Proof. *Pattern Recognition*, 34 (2001): 1393-1403 http://dx.doi.org/10.1016/S0031-3203(00)00078-9

Da Silva I. N. Hernane Spatti D. Andrade Flauzino R. Liboni L. H. B. & Dos Reis Alves S. F. (2017). *Artificial Neural Networks: A Practical Course*. Springer International Publishing: Imprint: Springer. https://doi.org/10.1007/978-3-319-43162-8

Davenport, H. T., and Patil, J. D. (2012). Data Scientist: The Sexiest Job of the 21st Century. *Harvard Business Review*. Retrieved from: https://hbr.org/2012/10/data-scientist-the-sexiest-job-of-the-21st-century.

Derma, R., and Tolle, H. (2019). What Factors Influence Users to Install Photography-Category Application to their Android Smartphone? *International Journal of Interactive Mobile Technologies*, 13(02): 4-12. https://doi:10.3991/ijim.v13i02.6726

Ferrari, C., Berretti, S., & Del Bimbo, A. (2018). *Extended YouTube Faces: a Dataset for Heterogeneous Open-Set Face Identification*. 2018 24th International Conference on Pattern Recognition (ICPR), 3408–3413. doi:10.1109/ICPR.2018.8545642

Finlayson G. D. (2018). Colour and Illumination in Computer Vision. *Interface focus*, 8(4), 20180008. https://doi.org/10.1098/rsfs.2018.0008

Finlayson, G., and Fredembach, C. (2007). Detecting Illumination in Images. Retrieved from: https://www.cs.sfu.ca/~mark/ftp/Iccv07/iccv07.pdf

Fu, X. (2021). Design of Facial Recognition System Based on Visual Communication Effect. *Computational Intelligence and Neuroscience*, 2021(4): 1-9. https://doi.org/10.1155/2021/1539596

Ge, H., Dai, Y., Zhu, Z., and Wang, B. (2021). A Robust Face Recognition Algorithm Based on an Improved Generative Confrontation Network. *Applied Sciences*, 11(11588): 1-16. https://doi.org/10.3390/app112411588

Ghimire, D., and Lee, J. (2016). Geometric Feature-Based Facial Expression Recognition in Image Sequences Using Multi-Class AdaBoost and Support Vector Machines. *Sensors*, 13(6): 7714–7734. https://doi.org/10.3390%2Fs130607714

Goel, R., Mehmood, I., Ugail, H. (2021). A Study of Deep Learning-Based Face Recognition Models for Sibling Identification. *Sensors*, 21(5068): n.p. https://doi.org/10.3390/s21155068

Hidayat, R., Wibowo, B, M., Satria, R. B., Winursito, A. (2021). Implementation of Face Recognition Using Geometric Features Extraction. *Jurnal Lmiah Kursor*, 11(2): 83-90. https://doi.org/10.21107/kursor.v11i2.284

Hinton, E. G., Osindero, O., and Teh, Y. (2006). A Fast Learning Algorithm for Deep Belief Nets. *Neural Computation*, 18(7): 1527-54. https://doi:10.1162/neco.2006.18.7.1527

Kapil, D., and Jain A. (2013). A Brief Review on Feature Based Approaches for Face Recognition. *International Journal of Science and Research*, 6(14): 273-27.

KrishnapriyaK., S., Vangara, K., King, M.C., Albiero, V., & Bowyer, K. (2019). *Characterizing the Variability in Face Recognition Accuracy Relative to Race*. 2019 IEEE/CVF Conference on Computer Vision and Pattern Recognition Workshops (CVPRW), 2278-2285. https://arxiv.org/pdf/1904.07325.pdf

Leslie, D. (2020). Understanding bias in facial recognition technologies: an explainer. *The Alan Turing Institute*. https://doi.org/10.5281/zenodo.4050457

Liu, C. J., and Ellisa, A. D. (2021). Editorial: Eating in the Age of Smartphones: The Good, the Bad, and the Neutral. *Frontiers in Psychology*, 12(796899): 1-2. https://doi: 10.3389/fpsyg.2021.796899

Lu, D., and Yan, L. (2021). Face Detection and Recognition Algorithm in Digital Image Based on Computer Vision Sensor. *Journal of Sensors*, 2021(4796768), 1-16. https://doi.org/10.1155/2021/4796768

Marks, P. (2021). Can the Biases in Facial Recognition Be Fixed; Also, Should They? *Communications of the ACM*, 64(3): 20-22. https://dx.doi.org/10.1145/3446877

Mothar, M. N., Hassan, A. M., Hassan, H. S., and Osman, N. M. (2013). The Importance of

Smartphone's Usage among Malaysian Undergraduates. *Journal of Humanities and Social Science*, 14(3): 112-118. Retrieved from: https://www.iosrjournals.org/iosr-jhss/papers/Vol14-issue3/S0143112118.pdf

Najibi, A. (2020). *Racial Discrimination in Face Recognition Technology*. Retrieved from https://sitn.hms.harvard.edu/flash/2020/racial-discrimination-in-face-recognition-technology/

Pankaj, S. D., and Wilscy, M. (2011). Face Recognition Using Fuzzy Neural Network Classifier. Retrived from: https://sci-hub.se/10.1007/978-3-642-24037-9_6

Parkhi, M. O., Vedaldi, A., and Ziseerman, A. (2015). *VGG Face Dataset*. Retrieved from: https://www.robots.ox.ac.uk/~vgg/data/vgg_face/

Priya, G. A., Rekha, P. A., Sarabya, K. R., and Thanuganesh, M. (2014). Face Recognition with Different Approaches: A Survey. I*nternational Journal of Emerging Engineering Research and Technology*, 2(7): 288-293. Retrieved from: http://www.ijeert.org/pdf/v2-i7/39.pdf

Proyecto, F., C. (2010). Face Recognition Algorithms. University of the Basque Country. Retrieved from: https://www.ehu.eus/ccwintco/uploads/e/eb/PFC-IonMarques.pdf

Ranjan, A., Behera, N. J., and Reza. M. (2020). *A Parallel Approach for Real-Time Face Recognition from a Large Database*. Retrieved from: https://arxiv.org/pdf/2011.00443.pdf

Rehman, H. M., Liew, S. C., Abbas, A., Jayaraman, P. P., Wah, Y. T., and Khan U. S. (2016). Big Data Reduction Methods: A Survey. *Data Science and Engineering*, (2016) 1:265–284, https://doi:10.1007/s41019-016-0022-0

Saraswathi, S. (2017). Smartphone Usage among Students. *International Education and Research Journal*, 3(6), 195-197. Retrieved from https://www.academia.edu/45200359/smartphone_usage_among_students

Saxena, S., Alam, M., Jabarullah, M., and Yadav, R. (2018). Face Recognition Using Coupled the

Hidden Markov Model with an Artificial Neural Network. *IOSR Journal of Computer Engineering*, 1(20): 8-15.

Singh S., and Singh R. (2014). Face Recognition Using Gabor Wavelet Transform and Feed Forward Neural Network. *International Journal of Advance Research In Science And Engineering*, 3(11): 370-377.

Schroff, F., Kalenichenko, D., and Phiblin, J. (2015-07-12). *FaceNet: A unified embedding for face recognition and clustering*, 2015 IEEE Conference on Computer Vision and Pattern Recognition, Boston, MA, USA. https://doi: 10.1109/CVPR.2015.7298682.

Shahin, R. O., Ayedi, R., Rayan, A., Rasha, M., and Ahmed, A. (2021). Human Face Recognition from Part of a Facial Image based in Image Stitching. *International Journal of Advanced Computer Science and Applications*, 12(12) 256-463.

Soni, M., and Shukla, S. (2020). Convolutional Neural Network and Hidden Markov Model Based Face Recognition. *International Journal of Electrical, Electronics and Data Communication*, 8(2): 26-30.

Struc, v. and Pavesic, N. (2009). A Case Study on Appearance Based Feature Extraction Techniques and Their Susceptibility to Image Degradations for the Task of Face Recognition. W*orld Academy of Science, Engineering and Technology,* 30(2009): 806-814.

The United Nations. (2021). Technology and Innovation Report 2021. Retrieved from https://unctad.org/system/files/official-document/tir2020_en.pdf

Vicario, G., and Coleman, S. (2018). A Review of Data Science in Business and Industry and a Future Review. *Applied Stochastic Models in Business and Industry,* 36(1), 6-18. https://doi:10.1002/asmb.2488

Viegas, M. A., Simoes, R., Thanekar, N., Barnerjee, S., Dicholkar, R. (2019). Different Approaches of Face Recognition. I*nternational Journal of Engineering Research & Technology,* 8(6): 933-934.

Wu, Z., Xiamixiding, R. Sjjanhar, A., Chen, J., and Wen, Q. (2018). Image Appearance-Based Facial Expression Recognition. *International Journal of Image and Graphics* 18(2): 1 -12. http://doi: 10.1142/S0219467818500122

Xu, Y., Liang, F., Zhang, G., and Xu, H. (2016). Image Intelligent Detection Based on the Gabor Wavelet and the Neural Network. *Symmetry* 8(11): 1-11. https://doi.org/10.3390/sym8110130

Yang, M., Kriegman, D, J., Ahuja, N. (2002). Detecting Faces in Images: A Survey. IEEE Transactions on Pattern Analysis and Machine Intelligence, 24(1): 1-25. http://dx.doi.org/10.1109/34.982883