Modeling Faces to Predict a Selected Face Using Kenyan Smartphone Images and Deep Learning

Wycliffe Atswenje Sikolia

A research proposal submitted in partial fulfillment of the requirements for the award of a Post Graduate Diploma in Applied Statistics of Jomo Kenyatta University of Agriculture and Technology.

2023

DECLARATION

This research proposal is my own work and has not been presented elsewhere for a degree award.

Signature..... Date ….....

Wycliffe Atswenje Sikolia

SCB384-3284/2013

Declaration by supervisors

This research proposal has been submitted for examination with our approval as university supervisors.

Signature .....……. Date .....……

Dr. Anthony Kibira Wanjoya

Department of Statistics and Actuarial Sciences

Jomo Kenyatta University of Agriculture and Technology

Signature .....……. Date .....……

Dr. Jane Aduda

Department of Statistics and Actuarial Sciences

Jomo Kenyatta University of Agriculture and Technology

DEDICATION

To my Family and Friends

ACKNOWLEDGMENT

Special regards to my supervisors Dr. Anthony Kibera Wanjoya and Dr. Jane Aduda for their guidance and relentless criticism on this work. Their continuous support, insightful comments, and demand for excellence have played a crucial role in this work. I am particularly grateful to my father whose moral support has been instrumental in my studies. My friends and family have also helped during the course of my studies by reminding me of the need to focus and complete my studies, which is the reason I got this far. Their words of positive affirmation gave me a shoulder to lean on when the going got difficult. I would also like to thank members of the department of statistics and actuarial sciences from the Jomo Kenyatta University of Agriculture and Technology for their support in my studies. Most importantly I would like to thank the almighty God for granting me the knowledge to carry out this study.

ABSTRACT

Facial recognition technology is the development of solutions that can match a face from an image or a real time video to that of a known person. While such technology exists, no research has been done purely on faces from black Americans or Africans. Moreover, published studies on the subject have developed the technology in question mostly using images collected from the web. This study aims to contribute to the existing literature by developing a facial recognition solution using images collected from Kenyan smartphone images.

Table of Contents

DECLARATION i
DEDICATION ii
ACKNOWLEDGMENT iii
ABSTRACT iv
List of Tables vi
List of Figures vii
List of Abbreviations viii
Chapter One 1
1.0 Introduction 1
1.1 Background of Study 1
1.2 Statement of the Problem 3
1.3 Justification of the study 3
1.4 OBJECTIVES OF THE STUDY 4
1.4.1 General Objective 4
1.4.2 Specific Objectives 4
Chapter Two 5
Literature Review 5
2.1 Introduction 5
2.2 Facial Recognition 5
2.2.1 Face Detection 5
2.2.3 Face Identification Approaches 9
2.3 Artificial Neural Networks 11
2.3.1 Neural Network Architectures 13
2.3.1.0 Multiple Layer Neural Network 14
References 21

List of Tables

List of Figures

List of Abbreviations and Acronyms

Chapter One

1.0 Introduction

1.1 Background of Study

The emergence of big data has disrupted technology. Critical to the discussion is the fact that data science is one of the best professions of the big data era. As evidenced, Davenport and Patil (2012) published an article arguing that data science is the sexiest job of the century. In a different publication, Vicario and Coleman (2018) mention that data scientists work in industries such as technology, production industries, e-commerce, and even agriculture. Clearly, the need for skilled personnel in data science is growing at an alarming rate, which has resulted in a lot of competition among giant companies in technology. This has led to innovations such as speech recognition (Siri) by apple, image detection by Google, and video recommendation from YouTube. Indeed, giant technology companies are consuming big data to create applications that are revolutionizing the world. These recent innovations prove that data science is growing rapidly and that the world is yet to see additional applications that will consume big data.

The big data era is fueled by gadgets that emit and store huge amounts of data. Examples of such gadgets include the smartphones, laptops, desktops, and IOT devices such as smart watches, and smart refrigerators. Owing to the recent increase in the amount of such data, people today store their extra data in the cloud and external hard drives but some people still store their data in gadgets that produce that data. Critical to the discussion is the fact that smartphones have limited storage spaces implying that smartphone users at times extend their storage to the cloud. Additionally, the huge amount of storage space in smartphones is consumed by images and videos. These images and videos are mostly from social media while some of them come from pictures and videos recorded from smartphones. In short, smartphones produce a considerable amount of data that should be harnessed to make the world a better place.

Indeed, huge technology companies such as Google and Apple have developed world class applications that have enabled them to enjoy a competitive advantage over other companies. These data science applications (from Google and Apple) have been made possible by techniques such as support vector machines, random forests, decision trees, and neural networks. The term neural network refers to a connection of layers composed of units called perceptrons, which is made up of an input layer (the predictor variables), a processing unit, and an output layer (the response variable). The processing unit could comprise one or more hidden layers. That said, deep learning occurs when a neural network is created with more than one hidden layer. Having defined deep learning, it is imperative to highlight that decision trees and support vector machines were more famous than neural networks. However, the neural networks were brought to fame when Geoffrey Hinton et al (2006) developed a neural network that predicted handwritten digits with an accuracy of 98%.

Another field that emerged from deep learning is facial recognition. Lately, the field of facial recognition has attracted a lot of attention from scholars and practitioners. Some of the innovations that have emerged from facial recognition include development of home authentication systems, attendance management systems, security surveillance systems, and emotion recognition systems. Critical to the debate is the fact that different solutions of creating facial recognition systems have been proposed. This owes to the fact that Fu (2021) mentions facial recognition using geometric features, facial recognition based on a template, and model based facial recognition as some of the solutions that are used to create facial recognition systems. Additionally, Ranjan et al., (2020) mentions that the traditional model based facial recognition system relies on one hundred and twenty-eight predictor variables. In summary, facial recognition is a new field that emerged out of deep learning and should be researched further.

1.2 Statement of the Problem

Researchers in facial recognition have developed solutions such as FaceNet, VGGFACE, VGG16, VGG19, OpenFace, and DeepFace. Critical to the discussion is the reality that there are at least thirty papers that have been published each with a different solution for facial recognition but that is not enough. This owes to the fact that the existing solutions have been developed based on images collected from the west and the web. This begs the question: What would come out of developing a facial recognition system based entirely on black faces? Another question that could be asked is whether different results could be obtained if a facial recognition system was developed solely on images collected from smartphones. Indeed, developing a model that predicts faces from blacks using smartphone images appears to be an interesting subject for discussion but that would be a very big experiment. It is why this study aims to develop models that can predict selected faces using data collected from smartphone images in Kenya.

1.3 Justification of the study

A smartphone could be elucidated as a phone with advanced features such internet connectivity, software usage, and connection to a cellular network. It is imperative to mention that the advanced features on smartphones have made smartphones a household item today. It is because these features have made smartphones applicable in cases such as learning, interpersonal communication, entertainment, photography, and even business transactions. Unlike desktop computers, laptops, and digital cameras smartphones are portable, which makes them convenient.

Indeed, smartphones are proving that they can replace cameras because they are portable and easily accessible. It follows that the number of pictures and videos taken by smartphones has increased and is likely to increase even further. It follows that building tools that could help humans peruse through these videos and pictures will improve the quality of life among smartphone users.

It is clear that this study could lay a foundation that could help future scholars and practitioners to develop technology that could help smartphone users browse through pictures and videos stored on their smartphones. However that is not all. This owes to the reality that it could also lay a foundation for developing technology such as attendance management systems. An attendance management system could be defined as software based system that records attendance based on data from its users. This could be very useful for managing how students' attend their classes both within and outside the institution. That is not all. It could be used by the security department to identify whether someone walking into the institution is a student, an employee, or a visitor. This would add a lot of value to the institution because employees and students could not forget their identification cards, but they will always carry their faces with them.

1.4 OBJECTIVES

1.4.1 General Objective

To develop a model that would predict a selected face using Kenyan smartphone images and deep learning.

1.4.2 Specific Objectives

1. To develop an algorithm that would extract human faces from pictures taken by smartphones and prepare the faces for deep learning.
2. To use convolution neural networks to build a model that can detect African faces given a list of smartphone images.
3. To use artificial neural networks to build a model that can detect African faces given a list of smartphone images.
4. To compare the performance of convolution and artificial neural networks on African faces from smartphone pictures.

Chapter Two

Literature Review

2.1 Introduction

This section surveys previous works done on facial recognition with a bias towards the objectives of this work. It begins with examining different types of methodologies that have been used for facial recognition before delving into how different types of neural networks have been used for facial recognition. Specifically, this proposal discusses how convolution neural networks, artificial neural networks, and how they have been used for facial recognition.

2.2 Facial Recognition

Facial recognition is a biometric technique used to identify faces and match those faces to a database of faces with an aim of identifying a human being from an image. From the definition, it is clear that face recognition is a two-step process with the first step being face detection and the second step being face identification. The first step of facial recognition (or the face detection step) is identifying and extracting human faces from an image. In this step, all objects in an image are extracted and checked to confirm if a picture contains a human face. If any human face is present in the image, the face is extracted from the image before step two begins. In the second step or the image identification step, an image is compared to faces stored in a database to identify if the face matches the face of a known person. In short, there is a difference between facial detection and facial recognition and that facial recognition begins with facial detection and finalizes with facial identification.

2.2.1 Face Detection

Given an arbitrary image, the objective of facial detection is to establish whether or not there are any faces in the image and if present, return the image location and extent of each face (Yang, Kriegman and Ahuja, 2002). It is important to highlight that there are several methods that could be

used for detecting faces from images. These methods include knowledge based methods, feature invariant approaches, template matching methods, and appearance based methods. Indeed, the mentioned methods are important when detecting faces from images, but all these methods are accompanied by several challenges. This owes to the reality that Yang, Kriegman and Ahuja (2002) list the following five challenges that are associated with facial detection: - pose, occlusion, aging face expression, imaging conditions and image orientation. Moreover, face expression is not only a challenge in face detection but also in face recognition. It follows that researchers on facial recognition should identify methods of tackling the mentioned challenges associated with face detection.

2.2.1.1 Challenges in Face Detection

Pose: A review of images databases will indicate that people like taking images in different poses. It follows that an image is likely to have a face that is twisted to the right, left, or even upside down. Moreover, some features such as the nose, eye, or ears maybe wholly or partially occluded which is an additional challenge in facial recognition. This problem is always solved by rotating images back to an upright position.

Occlusion: Human beings often have features that could affect image detection. For instance, men are known to have beards, which may or may not exist in images. It is also important to highlight that people at times wear spectacles, which also affects face detection. Moreover, COVID 19 forced people to wear masks, which present a unique challenge in facial recognition.

Aging: Human faces are known to change with age progression which presents a challenge in facial recognition. This implies that there would be a significant difference in images if the time difference between the images is large. It is notable that aging will not be a challenge to this paper because people tend to change their smartphones for a few years. It is notable however that Singh and Prasad (2018) propose the use of coupled auto-encoder networks and non-linear analysis as a solution to the aging problem in facial recognition.

Facial expressions: Images of human faces could also be affected by their emotions because people can change their faces based on emotions they are experiencing. Critical to the discussion is the reality that Singh and Prasad (2018) cite expression invariant 3D face recognition as a solution to the problems of facial expressions in image recognition.

Imaging conditions and image orientation: A huge chunk of solutions in computer vision make the assumption that there is a single illuminant lighting in an image. Regardless, that is not always the case. As evidenced, Finlayson and Fredembach (2007) reveal that images always contain shadows depending on the positions from different lights that affect an image. Important to the debate is the truth that Finlayson (2018) proposes a solution to the problems arising from illumination in computer vision.

2.2.2 Face Detection Approaches

2.2.2.1 Knowledge Based Methods of Facial Detection

This method relies on a set of rules to detect whether there is a human face in an image. The method captures the human knowledge of faces and interprets the knowledge into a set of rules. For instance, the face has two symmetric eyes; the eye areas are darker than the cheeks, the distance between eyes, and the difference in colors between the eyes and cheeks. It is notable that using the knowledge base method for face detection could be difficult because it is difficult to develop a set of rules that can correctly identify a human face. This owes to the fact that there could be very many false positives if the rules are too general. Likewise, there could be many false negatives if the rules are too strict. This drawback has hampered researchers from using this technique. However, Chen et al., (2001) used the knowledge based method to detect faces in an image with an accuracy of 94%. One disadvantage with this method is that it is not efficient.

2.2.2.2 The Feature Invariant Approach of Face Detection

The feature invariant method of face detection is a little bit different from the knowledge based method because it uses statistical methods on facial landmarks. Celiktutan, Ulukaya, and Sankur (2013) define a face landmark as a prominent feature that can play a discriminative role or

can serve as anchor points in face detection. Examples of such landmarks include the eye corners, the nose tip, nostril corners, mouth corners, end points of eyebrow arcs, ear lobes, and the chin. This approach works by detecting facial landmarks, texture and skin color before using a statistical model to identify the presence of a face in an image. Critical to the discussion is the reality that different authors have used the feature invariant approach for face detection. For instance, Kapil and Jain (2013) compared texture based to the structure and shape based feature invariant based methods and concluded that the texture based method is more accurate. However, the authors argue that feature invariant based methods are computationally expensive.

2.2.2.3 The Template Based Approach of Face Detection

This method functions to extract facial image features to gain the Euclidean distance value served as input face comparison value of the users' faces stored in the database (Hidayat, Wibowo, Satria, Winursito, 2021). Simply put, the template based approach transforms an image into geometric primitives like curves and points. This is done by identifying distinctive features like the eye, the nose, the chin, and the mouth before measuring their relative positions, widths and other parameters of the distinctive features. Features extracted from an image are then compared to known features of a human face to check whether an image is that of a human face. For further elucidation the eye, nose, mouth and the chin are compared to that of a human face. If the features obtained from the image match those of a human face, then the object in question is declared to be a human face. It is vital to note that Hidayat, et al., (2021) assert that the template approach of facial recognition is known to have a lighter computational load than other methods because it does not require features from the entire face.

2.2.2.4 The Appearance Based Approach of Facial Detection

The idea behind using Appearance methods for face detection relies on the linear algebra concept of subspaces. This approach of facial detection relies on the entire face, which is taken in as an input image data. The data collected from the input image is processed into a two dimensional pattern that is later used to decide whether there is a human face in an image. Critical to the

discussion is the fact that this technique finds the best facial features because it rejects redundant information and keeps important information. Vital to the discussion is the fact that different authors have used the appearance based technique successfully. For example, Rusia and Singh (2023) used the appearance based technique of facial recognition and examined some of the face identity threats faced by this technique. Regardless, Yan et al., (2018) argues that appearance based methods are computationally expensive and have difficulty handling substantial amounts of facial variations.

2.2.3 Face Identification Approaches

As already mentioned, facial recognition is a two-step process with the first face being the face detection and the second step being the face identification step. The face identification phase is where facial characteristics are extracted from a detected face and compared to a known face to confirm if the facial characteristics match those of the known face. Evidence from literature suggests that the template approach and the appearance based approaches are not only used in face detection but could also be used in face identification. As evidenced, Proyecto (2010) discusses template matching and the appearance based technique in both face detection and face identification. It is important to highlight that different publications on techniques that are used in face identification exist. Apart from template matching and appearance based methods, statistical approaches are also used in face identification.

2.2.3.1 Template Matching/ Geometric Approaches

The template matching or the geometric approach of facial recognition is similar to the template matching of the face detection step. However, the objective of the facial recognition step is different from the objective in the face identification step. This owes to the reality that the objective of the facial recognition step is to match a face to a known person while the objective in the face detection step is to identify whether an object in an image is a human face or not. Like in the face detection step, features like the eye, the nose, the chin, and the mouth are extracted from a human face before matching the features in question to a known face. Consider a face *A* belonging to a

person *B* and a face *C* belonging to an unknown person. The template matching approach will collect facial characteristics from faces *A* and *C*. These characteristics from the unknown face *C* will be compared to characteristics from the known face *A*. If a match is found, then the decision will be that the unknown face *C* belongs to person *B*.

It is critical that several authors have applied the geometric approach of facial recognition in their studies. For example, Ghimire and Lee (2016) used the approach in question to predict emotions on a sequence of images that were extracted from videos. Specifically, Ghimire and Lee (2016) ran a multi-class AdaBoost algorithm and a support vector machines algorithm on the Cohn-Kanade (CK+) facial expression database and obtained an accuracy of 95.17% and 97.35% respectively. Another example of a study that used the geometric technique of facial recognition is one by Ayo et al., (2021). This owes to the reality that the authors in question used the geometric approach of facial recognition together with the you-only-look-once (YOLO) algorithm to predict age, gender and emotions. In their study, the authors were able to predict gender and emotions with an 80% accuracy. Regardless, Ayo et al., (2021) were not able to predict age accurately and mentioned that accurate age prediction was hampered by the lighting conditions of an image.

2.2.3.2 Appearance Based Methods

Appearance based methods of face identification work the same way they work for face detection with the difference being the purpose of the method. This owes to the fact that the entire face is used to identify a face but with an aim of matching a face to that of a known person. It is important to highlight that this technique could be classified into linear and non-linear methods. Examples of linear methods include principal components analysis, independent component analysis, linear discriminant analysis, and linear regression classifier. Non-linear methods include kernel principal component analysis, local linear embedding, and kernel linear discriminant analysis. In a nonlinear approach the input image is mapped into higher dimensional space in which the face is simplified and linear. In principal component analysis a number of images are taken

using gray levels. Each image is mapped to a long vector of gray levels. Several views of each person are collected in the database during training. During recognition a vector corresponding to an unknown face is compared with all vectors in the database (Viegas et al., 2019).

It is imperative to mention that several authors have investigated the appearance based method for facial recognition. For instance, Struc and Pavesic (2009) examine the performance of appearance based methods subject to different environmental factors and conclude that the linear discriminant analysis produces the best results across different environmental conditions. Wu et al., (2018) also debate appearance based methods of facial recognition by examining facial expressions using the technique in question. The authors controlled for lighting conditions using a histogram equalization technique and a brightness preserving technique and concluded that the brightness preserving technique performs better than the histogram equalization technique. Broti (2019) also examines appearance based methods of facial recognition by discussing the principal components analysis, independent component analysis, linear discriminant analysis methods used in facial recognition. A drawback for this method is that it is challenging to find an efficient combination of dimensionality reduction technique and classifier.

2.3 Artificial Neural Networks

Artificial neural networks is a machine learning technique that tries to imitate the intelligence of a human brain. The human brain contains neurons that are connected to one another through axons and dendrites. The connecting region between axons and dendrites is called a synapse. The strength of synaptic connections often changes due to changes in external stimuli, which in turn influence how learning occurs in the human brain. Like biological neurons, artificial neural networks contain computational units called neurons. These computational units are connected to one another through weights that perform the same role as synapses in biological neurons. An artificial neural network computes a function of the inputs by propagating the

computed values from the input neurons to the output neuron(s) and using the weights as intermediate parameters. Learning occurs by changing the weights connecting the neurons.

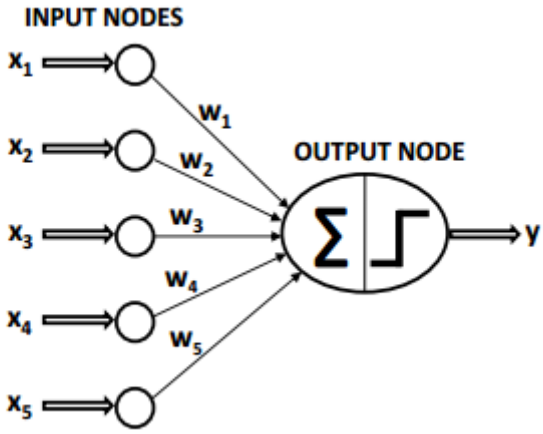

The simplest form of a neural network is called a perceptron and includes a single input layer, an activation function, and the output layer. Consider the image shown in figure 1.0 above and the case of a binary response variable (Y) with 1 is the presence of an observed parameter and 0 the absence of the observed parameter. The input layer contains predictor variables (X_1, X_2, … X_n) with weights (W_1, W_2, … W_n), which are mapped to the output node Y using an activation function. The activation function takes in the computed probability of the function of the weights W_i and predictor variable X_i and produces a probability of the response variable being 1 or 0. The activation function then takes the predicted probability and produces an output 1 if the predicted probability is close to 1 and produces an output 0 if the predicted probability is close to 1. It follows that the perceptron neural network can be computed using the formula shown below.

$$\hat{Y} = \sum_{i=0}^{n} W_i X_i$$

While the above equation may work in a variety of settings, there are instances where we need to introduce a bias to a neural network for it to work accordingly. The mentioned bias could be compared to penalizing a regression model. Basically, we introduce a bias neuron that shifts the line of fit to the right or left depending on the original position of the line of fit. Another way to think

about biases is simply by considering any linear function, y = mx + b. Let's say you are using y to approximate some linear function z. If z has a non-zero z-intercept, and you have no bias in the equation for y (i.e. y = mx), then y can never perfectly fit z. Similarly, if the neurons in your network have no bias terms, then it can be harder for your network to approximate some functions. The figure below shows an example of neural network architecture with a single bias neuron.

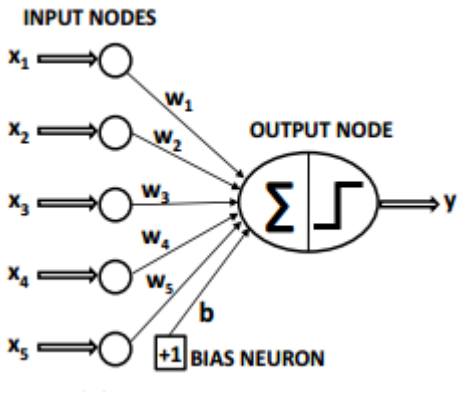

Thus, the perceptron of a single layer neural network is shown in the formula below. The output is represented by $\hat{Y}$, which is equal to the sum of weight W (W_1, W_2… W_n) multiplied by the predictor variables X(X_1, X_2… X_n) plus the bias neuron b.

$$\hat{Y} = \sum_{i=1}^{n} W_i X_i + b$$

2.3.1 Neural Network Architectures

The single layer neural network architecture is the basis of neural networks and has already been discussed in the introductory section of neural networks. Other neural network architectures include the multiple layer neural networks, radial basis functions neural networks, restricted Boltzmann machines, the convolution neural network, and the recurrent neural network. However, the multilayer neural network (ANN), and the convolution neural network will be discussed in this paper because those are some of the tools the researcher will be using in this study.

2.3.1.0 Multiple Layer Neural Network

As the title suggests a multilayer neural layer architecture is formulated when two or more networks are used to develop a neural network. A multilayer neural network consists of an input layer, which feeds in data to the first layer of the neural network. The first layer then feeds in data to at least one additional layer before sending the results to an output layer (for a case of a neural network with two layers). It is important to highlight that the training process of a multilayer neural network involves the backpropagation algorithm or the generalized Delta rule (Da Silva et al., 2017). The backpropagation algorithm is best described as follows: The multilayer neural network begins by setting random weights during the first pass across the neurons. Upon reaching the output of the neuron, the weights are compared to the actual output and readjusted accordingly until the predicted value of the neuron is close to the actual value.

2.3.1.0.1 Deriving the Backpropagation Algorithm

Let W_{ji}^{L} be the weight matrices denoting the value of the synaptic weight that connects the jth neuron of layer (L) to the ith neuron of layer $(L-1)$. Consider the image in the figure below

I. $W_{ji}^{(3)}$ Is the synaptic weight connecting the jth neuron of output layer to the ith neuron of layer 2.

II. $W_{ji}^{(2)}$ Is the synaptic weight connecting the jth neuron of hidden layer 2 to the ith neuron of layer 1.

III. $W_{ji}^{(1)}$ Is the synaptic weight connecting the jth neuron of hidden layer 1 to the ith signal of the input layer.

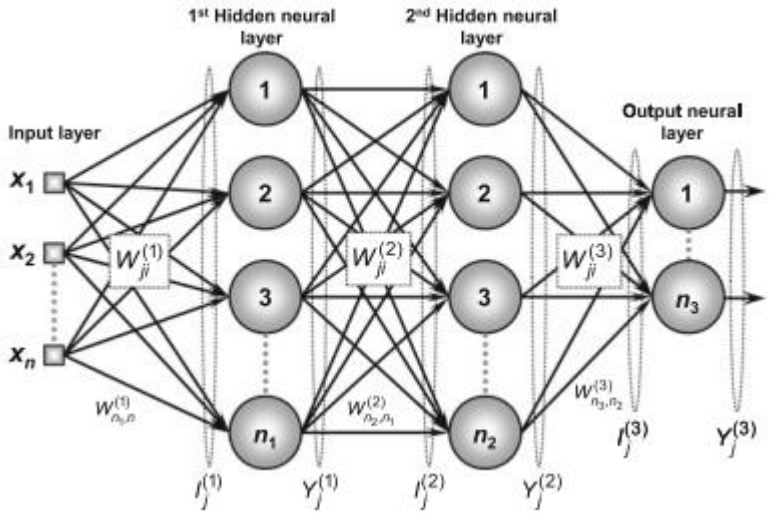

Let I_j^L be vectors whose elements denote the weighted inputs of the jth neuron of layer L and are defined as the following.

$$I_j^1 = \sum_{i=0}^{n} W_{ji}^1 * x_i \leftrightarrow I_j^1 = W_{1,0}^1 * x_0 + W_{1,1}^1 * x_1 + \cdots + W_{1,n}^1 * x_n \tag{2.0}$$

$$I_j^2 = \sum_{i=0}^{n1} W_{ji}^2 * y_i^1 \leftrightarrow I_j^2 = W_{1,0}^2 * y_0^1 + W_{1,1}^2 * y_1^1 + \cdots + W_{1,n1}^2 * y_{n1}^1 \tag{2.1}$$

$$I_j^3 = \sum_{i=0}^{n2} W_{ji}^3 * y_i^2 \leftrightarrow I_j^3 = W_{1,0}^3 * y_0^2 + W_{1,1}^3 * y_1^2 + \cdots + W_{1,n1}^3 * y_{n2}^2 \tag{2.2}$$

Let Y_j^L be vectors whose elements denote the output of the jth neuron related to the layer L and are defined as:

$$Y_j^1 = g\left(I_j^1\right) \tag{2.3}$$

$$Y_j^2 = g\left(I_j^2\right) \tag{2.4}$$

$$Y_j^3 = g(I_j^3) \tag{2.5}$$

Another important aspect of the backpropagation is the chain rule, which is defined as: $\frac{d}{dx}\left[f(g(x))\right] = f'(g(x)) * g'(x)$. The next step of deriving the backpropagation algorithm involves defining a function that can represent the approximation error. It is important to highlight that this function will measure the deviation between the actual values and the predicted values. As a result the squared error function is employed to measure the deviation in question. This error function will be defined as follows.

$$E(k) = \frac{1}{2}\sum_{j=1}^{n3}\left(d_j(k) - y_j^3(k)\right)^2 \quad (2.6)$$

Where $y_j^3(k)$ is the value produced by the jth output neuron of the network for the kth training sample, while $d_j(k)$ is the corresponding desired value. If there are p training samples the performance of the backpropagation algorithm would be calculated using the mean squared error defined by

$$E_m = \frac{1}{p}\sum_{k=1}^{p} E(k) \quad (2.7)$$

Where $E(k)$ is the squared error obtained in equation 2.6. In order to communicate the derivation of the backpropagation algorithm the process will be divided into two parts. The first part will focus on the synaptic adjustment of weight matrix $w_{ji}^{(3)}$, which represents the output layer. The second part will focus on adjusting intermediate layers $w_{ji}^{(2)}$ and $w_{ji}^{(1)}$.

Adjusting the Synaptic Weights of the Output Layer

Prior to diving into the mathematics of deriving the backpropagation algorithm, it should be noted that the purpose of the training process in output layer is to minimize the error between predicted and actual values. This will be achieved by minimizing the difference between the predicted and actual values. In short, the objective is to obtain an optimal w* so that the squared error {E(w*)} of the whole sample set is as low as possible. Using the chain rule we differentiate equation 2.6 as shown below.

$$\nabla E^3 = \frac{\partial E}{\partial W_{ji}^{(3)}} = \frac{\partial E}{\partial Y_j^{(3)}} * \frac{\partial Y_j^{(3)}}{\partial I_j^{(3)}} * \frac{\partial I_j^{(3)}}{\partial W_{ji}^{(3)}} \quad (2.8)$$

$$\frac{\partial I_j^{(3)}}{\partial W_{ji}^{(3)}} = Y_i^{(2)}$$ (Obtained from the partial derivative of equation 2.2 with respect to W_{ji}) (2.9)

$$\frac{\partial Y_j^{(3)}}{\partial I_j^{(3)}} = g'\left(I_j^{(3)}\right)$$ (Obtained from equation 2.5) (2.10)

$$\frac{\partial E}{\partial Y_j^{(3)}} = -\left(d_j - Y_j^{(3)}\right)$$ (Obtained from equation 2.6) (2.11)

Where g' denotes the first order derivative of the activation function. Replacing equations 2.9, 2.10 and 2.11 in equation 2.8 we get:

$$\frac{\partial E}{\partial W_{ji}^{(3)}} = -\left(d_j - Y_j^{(3)}\right) * g'\left(I_j^{(3)}\right) * Y_i^{(2)} \tag{2.12}$$

Let $\delta_j^3 = -\left(d_j - Y_j^{(3)}\right) * g'\left(I_j^{(3)}\right)$ and ŋ be the learning rate. (2.13)

Also, note that the direction of the weight $W_{ji}^{(3)}$ matrix must be made in the opposite direction of the gradient because the optimization goal is to minimize the squared error (Da Silva et al., 2017).

$$\Delta W_{ji}^{(3)} = -\eta * \frac{\partial E}{\partial W_{ji}^{(3)}} \leftrightarrow \Delta W_{ji}^{(3)} = \eta * \delta_j^{(3)} * Y_i^{(2)} \tag{2.14}$$

Equation 2.13 can also be written as

$$W_{ji}^{current} = W_{ji}^{previous} + \eta * \delta_j^{(3)} * Y_i^{(2)} \tag{2.15}$$

In short, we have shown through equation 2.14 that the neuron adjusts weights of the output layer by considering the difference the observed values and the actual values.

Adjusting the Synaptic Weights of the Intermediate Layers

Unlike the neurons in the output layer, neurons in the intermediate layers do not have access to the actual values. It follows that adjustments in the intermediate layers rely on neurons in the aftermost layers for feedback.

Adjusting the synaptic weights of the second hidden layer

In order to train the second neural layer we need to adjust the weight matrix $W_{ji}^{(2)}$ so as to minimize the error between outputs produced by the network and the adjustment produced in the output layer.

$$\nabla E^3 = \frac{\partial E}{\partial W_{ji}^{(2)}} = \frac{\partial E}{\partial Y_j^{(2)}} * \frac{\partial Y_j^{(2)}}{\partial I_j^{(2)}} * \frac{\partial I_j^{(2)}}{\partial W_{ji}^{(2)}} \tag{2.16}$$

$\frac{\partial I_j^{(i)}}{\partial W_{ji}^{(i)}} = Y_i$ (Obtained from the partial derivative of 2.1 with respect to W_{ji}) (2.17)

$\frac{\partial Y_j^{(2)}}{\partial I_{ji}^{(2)}} = g'(I_j^{(2)})$ (Obtained from equation 2.4) (2.18)

$$\frac{\partial E}{\partial Y_j^{(2)}} = \sum_{k=1}^{n3} \frac{\partial E}{\partial I_j^{(3)}} * \frac{\partial I_k^{(3)}}{\partial Y_j^{(2)}} = \underbrace{\sum_{k=1}^{n3} \frac{\partial E}{\partial I_k^{(3)}}}_{parcel(i)} * \underbrace{\frac{\partial \sum_{k=1}^{n3} W_{kj}^{(3)} * Y_j^{(2)}}{\partial Y_j^{(2)}}}_{parcel\ (ii)} \tag{2.19}$$

Note that the partial derivative of parcel (ii) with respect to $Y_j^{(2)}$ is the value of $W_k^{(3)}$. Thus equation 2.18 becomes:

$$\frac{\partial E}{\partial Y_j^{(2)}} = \underbrace{\sum_{k=1}^{n3} \frac{\partial E}{\partial I_k^{(3)}}}_{parcel(i)} * \underbrace{W_{kj}^{(3)}}_{parcel(ii)} \tag{2.20}$$

The value of parcel (ii) in equation 2.19 represents the synaptic weight of neurons from the output layer that is connected to the neuron j of the second intermediate layer. Also, the weights $W_{ji}^{(3)}$ have been adjusted in the previous step based on errors, which will be used to adjust weights in the second intermediate layer. Moving on to parcel (i) in equation 2.19, the result can be simplified by multiplying equations 2.10 and 2.11 together, which results in the actual value of δ_j^3 defined above. Thus, substituting appropriately equation 2.19 becomes

$$\frac{\partial E}{\partial Y_j^{(2)}} = -\sum_{k=1}^{n3} \delta_k^3 * W_{kj}^{(3)} \tag{2.21}$$

Substituting equations 2.16, 2.17, and 2.20 in equation 2.15

$$\frac{\partial E}{\partial Y_j^{(2)}} = -\left(\sum_{k=1}^{n3} \delta_k^{(3)} * W_{kj}^{(3)}\right) * g'\left(I_j^{(2)}\right) * Y_i^{(1)} \tag{2.22}$$

Da Silva et al., (2017) posit that the adjustment of the weight matrix $W_{ji}^{(2)}$must be made in the opposite direction of the gradient in order to minimize the error. Thus:

$$\Delta W_{ji}^{(2)} = -\eta * \frac{\partial E}{\partial W_{ji}^2} \leftrightarrow \Delta W_{ji}^{(2)} = \eta * \delta_j^{(2)} * Y_i^{(1)} \tag{2.23}$$

Where

$$\delta_j^{(2)} = -\left(\sum_{k=1}^{n3} \delta_k^{(3)} * W_{kj}^{(3)}\right) * g'\left(I_j^{(2)}\right) \tag{2.24}$$

Equation 2.23 can also be written as

$$W_{ji}^{(2)}(t+1) = W_{ji}^{(2)}(t) + \eta * \delta_j^{(2)} * Y_i^{(1)} \tag{2.25}$$

In short, we have shown that that equation 2.24 adjusts weights from neurons in the second hidden layer by considering backpropagation errors originating from the neurons in the output layer.

Adjusting the synaptic weights of the first hidden layer

The objective of the training process of the first hidden layer consists of adjusting the weight matrix $W_{ji}^{(1)}$ in order to minimize the error between the output produced by the network and the backpropagated error originating from the adjustment of the neurons in the second hidden layer. Thus, we have:

$$\nabla E^{(1)} = \frac{\partial E}{\partial W_{ji}^{(1)}} = \frac{\partial E}{\partial Y_j^{(1)}} * \frac{\partial Y_j^{(1)}}{\partial I_j^{(1)}} * \frac{\partial I_j^{(1)}}{\partial W_{ji}^{(1)}} \tag{2.26}$$

$$\frac{\partial I_j^{(1)}}{\partial W_{ji}^{(1)}} = X_i \text{ (Obtained from the partial derivative of 2.0 with respect to } W_{ji}) \tag{2.27}$$

$$\frac{\partial Y_j^{(1)}}{\partial I_{ji}^{(1)}} = g'(I_j^{(1)}) \text{ (Obtained from equation 2.3)} \tag{2.28}$$

$$\frac{\partial E}{\partial Y_j^{(1)}} = \sum_{k=1}^{n2} \frac{\partial E}{\partial I_j^{(2)}} * \frac{\partial I_k^{(2)}}{\partial Y_j^{(1)}} = \underbrace{\sum_{k=1}^{n2} \frac{\partial E}{\partial I_k^{(2)}}}_{parcel(i)} * \underbrace{\frac{\partial \sum_{k=1}^{n2} W_{kj}^{(2)} * Y_j^{(1)}}{\partial Y_j^{(1)}}}_{parcel\ (ii)} \tag{2.29}$$

Note that the partial derivative of parcel (ii) with respect to $Y_j^{(2)}$ is the value of $W_k^{(2)}$. Thus, equation 2.29 becomes:

$$\frac{\partial E}{\partial Y_j^{(1)}} = \underbrace{\sum_{k=1}^{n2} \frac{\partial E}{\partial I_k^{(2)}}}_{parcel(i)} * \underbrace{W_{kj}^{(2)}}_{parcel(ii)} \tag{2.30}$$

The value of parcel (ii) in equation 2.30 relates to the synaptic weights of neurons from the second hidden layer. It is important to emphasize that all the weights of $W_{ji}^{(2)}$ were adjusted in the previous step based on the backpropagated errors from the adjustment of the weights of $W_{ji}^{(2)}$, which in turn were adjusted based on the real values of the error. Parcel (i) in equation 2.30 can be obtained by multiplying equations 2.18 and 2.19, which will result in the value of $\delta_j^{(2)}$ obtained in equation 2.24.

Making appropriate substitutions equation 2.29 becomes

$$\frac{\partial E}{\partial Y_j^1} = -\sum_{k=1}^{n2} \delta_k^{(2)} * W_{kj}^{(2)} \tag{2.31}$$

Substituting equations 2.27, 2.28 and 2.31 in 2.26 in equation 2.26 we get

$$\frac{\partial E}{\partial W_{ji}^{(1)}} = -\left(\sum_{k=1}^{n2} \delta_k^{(2)} * W_{kj}^{(2)}\right) * g'\left(I_j^{(1)}\right) * X_i \tag{2.32}$$

In short, the adjustment of the weight matrix $W_{ji}^{(1)}$ should be made in the opposite direction of the gradient in order to minimize the error.

$$\Delta W_{ji}^{(1)} = -\eta * \frac{\partial E}{\partial W_{ji}^{(1)}} \leftrightarrow \Delta W_{ji}^{(1)} = \eta * \delta_j^{(i)} * X_i \tag{2.33}$$

Where

$$\delta_j^{(1)} = -\left(\sum_{k=1}^{n2} \delta_k^{(2)} * W_{kj}^{(2)}\right) * g'\left(I_j^{(i)}\right) \tag{2.34}$$

Equation 2.34 can also be written as

$$W_{ji}^{(1)}(t+1) = W_{ji}^{(1)}(t) + \eta * \delta_j^{(1)} * X_i^{(1)} \tag{2.35}$$

Therefore, expression (2.35) adjusts the weight of the neurons from the second hidden layer, using the backpropagation of the error originated from the neurons of the output layer.

References

Agrawal, A. K., Singh, N. Y. (2015). Evaluation of Face Recognition Methods in Unconstrained Environments. *International Conference on Intelligent Computing, Communication & Convergence*. Bhubaneswar, Odisha, India. https://www.sciencedirect.com/science/article/pit/S1877050915006560

Ayo, F. M., Mustapha, M., Braimah, A. J., and Aina, A. D. (2021). Geometric Analysis and YOLO Algorithm for Automatic Face Detection System in a Security Setting. *Journal of Physics*, 2199 (2022), 1-10. https://doi:10.1088/1742-6596/2199/1/012010. Retrieved on: 3 September, 2023.

Balaban, S. (2019). *Deep learning and face recognition: the state of the art.* Retrieved from: https://arxiv.org/pdf/1902.03524v1.pdf. Retrieved on: 3 September, 2023.

Brunelli, R., and Poggio, T. (2013). Face Recognition through Geometrical Features. Retrieved from: https://www.semanticscholar.org/paper/Face-Recognition-through-Geometrical-Features-Brunelli-Poggio/4748b4836011f0af46fcd6e1192e42d03bd5c1cb. Retrieved on: 3 September, 2023.

Celiktutan, O., Ulukaya, S., and Sankur, B. (2013). A Comparative Study of Face Landmarking Techniques. *EURASIP Journal on Image and Video Processing*, 3(2013). https://doi.org/10.1186/1687-5281-2013-13. Retrieved on: 3 September, 2023.

Chandra, B. Y. and Reddy G. K. (2020). A Comparative Analysis of Face Recognition Models on Masked Faces. *International Journal of Scientific & Technology Research*, 9(10):175-178.

Chen, L., Mark, H., Lin, J., and Han, C. (2001). Why Recognition in A Statistics-Based Face Recognition System Should be based on The Pure Face Portion: A Probabilistic Decision-Based Proof. *Pattern Recognition*, 34 (2001): 1393-1403 http://dx.doi.org/10.1016/S0031-3203(00)00078-9. Retrieved on: 3 September, 2023.

Da Silva I. N. Hernane Spatti D. Andrade Flauzino R. Liboni L. H. B. & Dos Reis Alves S. F. (2017). *Artificial Neural Networks: A Practical Course*. Springer International Publishing: Imprint: Springer. https://doi.org/10.1007/978-3-319-43162-8. Retrieved on: 3 September, 2023.

Davenport, H. T., and Patil, J. D. (2012). Data Scientist: The Sexiest Job of the 21st Century. *Harvard Business Review*. Retrieved from: https://hbr.org/2012/10/data-scientist-the-sexiest-job-of-the-21st-century. Retrieved on: 3 September, 2023.

Derma, R., and Tolle, H. (2019). What Factors Influence Users to Install Photography-Category Application to their Android Smartphone? *International Journal of Interactive Mobile Technologies*, 13(02): 4-12. https://doi:10.3991/ijim.v13i02.6726. Retrieved on: 3 September, 2023.

Ferrari, C., Berretti, S., & Del Bimbo, A. (2018). *Extended YouTube Faces: a Dataset for Heterogeneous Open-Set Face Identification*. 2018 24th International Conference on Pattern Recognition (ICPR), 3408–3413. doi:10.1109/ICPR.2018.8545642

Finlayson G. D. (2018). Colour and Illumination in Computer Vision. *Interface focus*, 8(4), 20180008. https://doi.org/10.1098/rsfs.2018.0008. Retrieved on: 3 September, 2023.

Finlayson, G., and Fredembach, C. (2007). Detecting Illumination in Images. Retrieved from: https://www.cs.sfu.ca/~mark/ftp/Iccv07/iccv07.pdf. Retrieved on: 3 September, 2023.

Fu, X. (2021). Design of Facial Recognition System Based on Visual Communication Effect. *Computational Intelligence and Neuroscience*, 2021(4): 1-9. https://doi.org/10.1155/2021/1539596. Retrieved on: 3 September, 2023.

Ge, H., Dai, Y., Zhu, Z., and Wang, B. (2021). A Robust Face Recognition Algorithm Based on an Improved Generative Confrontation Network. *Applied Sciences*, 11(11588): 1-16. https://doi.org/10.3390/app112411588. Retrieved on: 3 September, 2023.

Ghimire, D., and Lee, J. (2016). Geometric Feature-Based Facial Expression Recognition in Image

Sequences Using Multi-Class AdaBoost and Support Vector Machines. *Sensors*, 13(6): 7714–7734. https://doi.org/10.3390%2Fs130607714. Retrieved on: 3 September, 2023.

Goel, R., Mehmood, I., Ugail, H. (2021). A Study of Deep Learning-Based Face Recognition Models for Sibling Identification. *Sensors*, 21(5068): n.p. https://doi.org/10.3390/s21155068. Retrieved on: 3 September, 2023.

Hidayat, R., Wibowo, B, M., Satria, R. B., Winursito, A. (2021). Implementation of Face Recognition Using Geometric Features Extraction. *Jurnal Lmiah Kursor*, 11(2): 83-90. https://doi.org/10.21107/kursor.v11i2.284. Retrieved on: 3 September, 2023.

Hinton, E. G., Osindero, O., and Teh, Y. (2006). A Fast Learning Algorithm for Deep Belief Nets. *Neural Computation*, 18(7): 1527-54. https://doi:10.1162/neco.2006.18.7.1527. Retrieved on: 3 September, 2023.

Kapil, D., and Jain A. (2013). A Brief Review on Feature Based Approaches for Face Recognition. *International Journal of Science and Research*, 6(14): 273-27.

KrishnapriyaK., S., Vangara, K., King, M.C., Albiero, V., & Bowyer, K. (2019). *Characterizing the Variability in Face Recognition Accuracy Relative to Race*. 2019 IEEE/CVF Conference on Computer Vision and Pattern Recognition Workshops (CVPRW), 2278-2285. https://arxiv.org/pdf/1904.07325.pdf. Retrieved on: 3 September, 2023.

Leslie, D. (2020). Understanding bias in facial recognition technologies: an explainer. *The Alan Turing Institute*. https://doi.org/10.5281/zenodo.4050457. Retrieved on: 3 September, 2023.

Lu, D., and Yan, L. (2021). Face Detection and Recognition Algorithm in Digital Image Based on Computer Vision Sensor. *Journal of Sensors*, 2021(4796768), 1-16. https://doi.org/10.1155/2021/4796768. Retrieved on: 3 September, 2023.

Marks, P. (2021). Can the Biases in Facial Recognition Be Fixed; Also, Should They? *Communications of the ACM*, 64(3): 20-22. https://dx.doi.org/10.1145/3446877. Retrieved on: 3 September, 2023.

Mothar, M. N., Hassan, A. M., Hassan, H. S., and Osman, N. M. (2013). The Importance of Smartphone's Usage among Malaysian Undergraduates. *Journal of Humanities and Social Science*, 14(3): 112-118. Retrieved from: https://www.iosrjournals.org/iosr-jhss/papers/Vol14-issue3/S0143112118.pdf. Retrieved on: 3 September, 2023.

Najibi, A. (2020). *Racial Discrimination in Face Recognition Technology*. Retrieved from https://sitn.hms.harvard.edu/flash/2020/racial-discrimination-in-face-recognition-technology. Retrieved on: 3 September, 2023.

Parkhi, M. O., Vedaldi, A., and Ziseerman, A. (2015). *VGG Face Dataset*. Retrieved from: https://www.robots.ox.ac.uk/~vgg/data/vgg_face. Retrieved on: 3 September, 2023.

Priya, G. A., Rekha, P. A., Sarabya, K. R., and Thanuganesh, M. (2014). Face Recognition with Different Approaches: A Survey. I*nternational Journal of Emerging Engineering Research and Technology*, 2(7): 288-293. Retrieved from: http://www.ijeert.org/pdf/v2-i7/39.pdf. Retrieved on: 3 September, 2023.

Proyecto, F., C. (2010). Face Recognition Algorithms. University of the Basque Country. Retrieved from: https://www.ehu.eus/ccwintco/uploads/e/eb/PFC-IonMarques.pdf. Retrieved on: 3 September, 2023.

Ranjan, A., Behera, N. J., and Reza. M. (2020). *A Parallel Approach for Real-Time Face Recognition from a Large Database*. Retrieved from: https://arxiv.org/pdf/2011.00443.pdf. Retrieved on: 3 September, 2023.

Rehman, H. M., Liew, S. C., Abbas, A., Jayaraman, P. P., Wah, Y. T., and Khan U. S. (2016). Big Data Reduction Methods: A Survey. *Data Science and Engineering*, (2016) 1:265–284, https://doi:10.1007/s41019-016-0022-0. Retrieved on: 3 September, 2023.

Rusia, K. M., Singh K. D. (2023). A Comprehensive Survey on Techniques to Handle Face Identity Threats: Challenges and Opportunities. *Multimedia Tools and Applications* (2023) 82:1669–1748, https://doi.org/10.1007/s11042-022-13248-6. Retrieved on: 29 August, 2023.

Singh S., and Singh R. (2014). Face Recognition Using Gabor Wavelet Transform and Feed Forward Neural Network. *International Journal of Advance Research In Science And Engineering,* 3(11): 370-377.

Schroff, F., Kalenichenko, D., and Phiblin, J. (2015-07-12). *FaceNet: A unified embedding for face recognition and clustering*, 2015 IEEE Conference on Computer Vision and Pattern Recognition, Boston, MA, USA. https://doi: 10.1109/CVPR.2015.7298682. Retrieved on: 3 September, 2023.

Shahin, R. O., Ayedi, R., Rayan, A., Rasha, M., and Ahmed, A. (2021). Human Face Recognition from Part of a Facial Image based in Image Stitching. *International Journal of Advanced Computer Science and Applications*, 12(12) 256-463.

Struc, v. and Pavesic, N. (2009). A Case Study on Appearance Based Feature Extraction Techniques and Their Susceptibility to Image Degradations for the Task of Face Recognition. W*orld Academy of Science, Engineering and Technology,* 30(2009): 806-814.

Vicario, G., and Coleman, S. (2018). A Review of Data Science in Business and Industry and a Future Review. *Applied Stochastic Models in Business and Industry,* 36(1), 6-18. https://doi:10.1002/asmb.2488. Retrieved on: 3 September, 2023.

Viegas, M. A., Simoes, R., Thanekar, N., Barnerjee, S., Dicholkar, R. (2019). Different Approaches of Face Recognition. I*nternational Journal of Engineering Research & Technology,* 8(6): 933-934.

Wu, Z., Xiamixiding, R. Sjjanhar, A., Chen, J., and Wen, Q. (2018). Image Appearance-Based Facial Expression Recognition. *International Journal of Image and Graphics* 18(2): 1 -12. http://doi: 10.1142/S0219467818500122. Retrieved on: 3 September, 2023

Xu, Y., Liang, F., Zhang, G., and Xu, H. (2016). Image Intelligent Detection Based on the Gabor Wavelet and the Neural Network. *Symmetry* 8(11): 1-11. https://doi.org/10.3390/sym8110130. Retrieved on: 3 September, 2023

Yan, Y., Lee, F., Wu, X., and Chen, Q. (2018). Face Recognition Algorithm Using Extended Vector Quantization Histogram Features. *PLos One* 13(1): n.p. https://doi.org/10.1371%2Fjournal.pone.019037. Retrieved on: 3 September, 2023

Yang, M., Kriegman, D, J., Ahuja, N. (2002). Detecting Faces in Images: A Survey. IEEE Transactions on Pattern Analysis and Machine Intelligence, 24(1): 1-25. http://dx.doi.org/10.1109/34.982883. Retrieved on: 3 September, 2023.