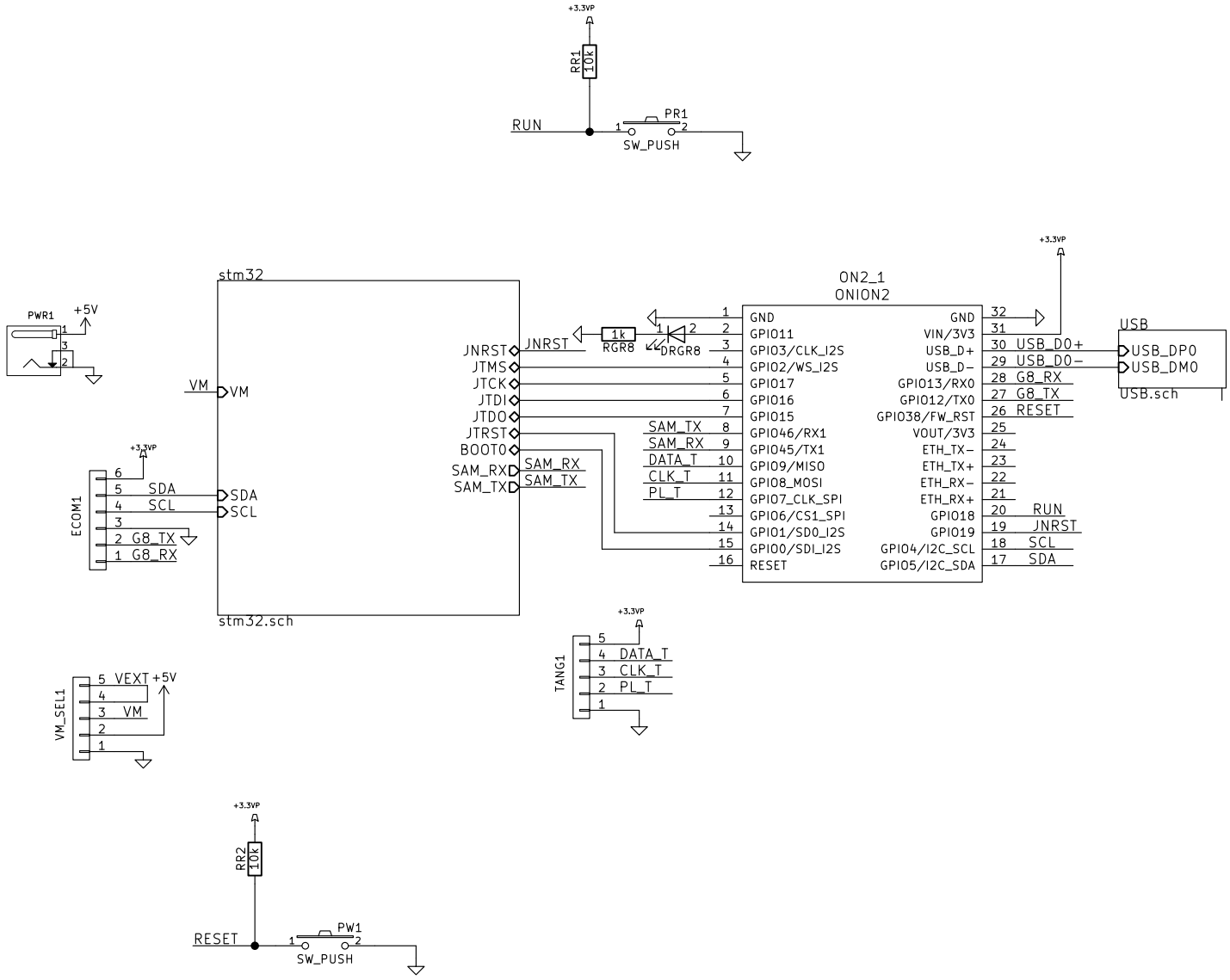
+3.3VP
RR1
10k
RUN
PR1
SW_PUSH
PWR1
+5V
stm32
VM
JNRST
JTMS
JTCK
JTDI
JTDO
JTRST
BOOT0
SAM_RX
SAM_TX
SDA
SCL
stm32.sch
ECOM1
G8_TX
G8_RX
1k
RGR8
DRGR8
ON2_1
ONION2
GND
GPIO11
GPIO3/CLK_I2S
GPIO2/WS_I2S
GPIO17
GPIO16
GPIO15
GPIO46/RX1
GPIO45/TX1
GPIO9/MISO
GPIO8_MOSI
GPIO7_CLK_SPI
GPIO6/CS1_SPI
GPIO1/SD0_I2S
GPIO0/SDI_I2S
RESET
VIN/3V3
USB_D+
USB_D-
GPIO13/RX0
GPIO12/TX0
GPIO38/FW_RST
VOUT/3V3
ETH_TX-
ETH_TX+
ETH_RX-
ETH_RX+
GPIO18
GPIO19
GPIO4/I2C_SCL
GPIO5/I2C_SDA
DATA_T
CLK_T
PL_T
USB
USB_DP0
USB_DM0
USB_D0+
USB_D0-
USB.sch
TANG1
VM_SEL1
VEXT
RR2
PW1
RESET

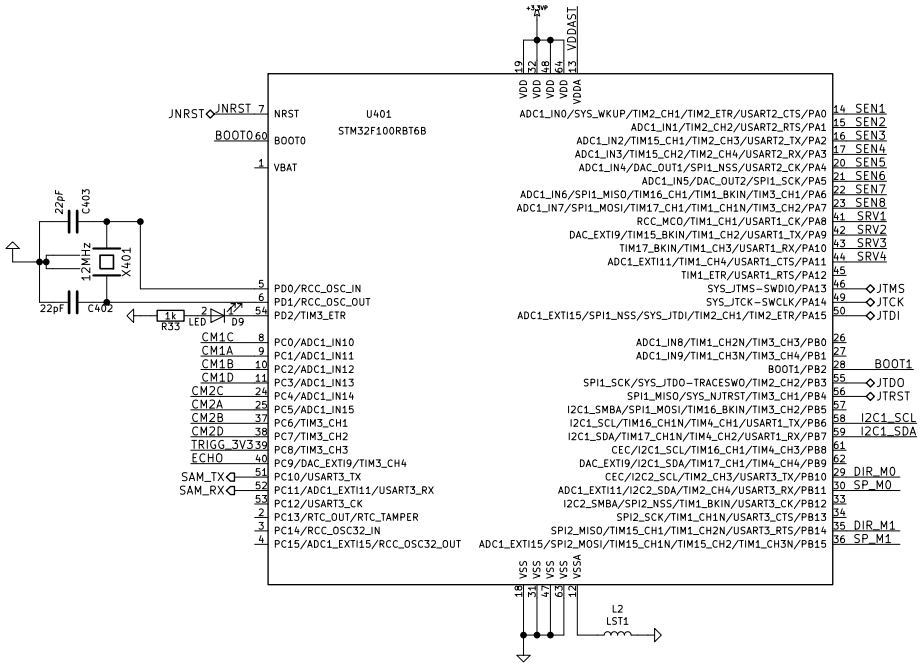
U401
STM32F100RBT6B
JNRST
BOOT0
VBAT
NRST
BOOT0
PD0/RCC_OSC_IN
PD1/RCC_OSC_OUT
PD2/TIM3_ETR
PC0/ADC1_IN10
PC1/ADC1_IN11
PC2/ADC1_IN12
PC3/ADC1_IN13
PC4/ADC1_IN14
PC5/ADC1_IN15
PC6/TIM3_CH1
PC7/TIM3_CH2
PC8/TIM3_CH3
PC9/DAC_EXTI9/TIM3_CH4
PC10/USART3_TX
PC11/ADC1_EXTI11/USART3_RX
PC12/USART3_CK
PC13/RTC_OUT/RTC_TAMPER
PC14/RCC_OSC32_IN
PC15/ADC1_EXTI15/RCC_OSC32_OUT
ADC1_IN0/SYS_WKUP/TIM2_CH1/TIM2_ETR/USART2_CTS/PA0
ADC1_IN1/TIM2_CH2/USART2_RTS/PA1
ADC1_IN2/TIM15_CH1/TIM2_CH3/USART2_TX/PA2
ADC1_IN3/TIM15_CH2/TIM2_CH4/USART2_RX/PA3
ADC1_IN4/DAC_OUT1/SPI1_NSS/USART2_CK/PA4
ADC1_IN5/DAC_OUT2/SPI1_SCK/PA5
ADC1_IN6/SPI1_MISO/TIM16_CH1/TIM1_BKIN/TIM3_CH1/PA6
ADC1_IN7/SPI1_MOSI/TIM17_CH1/TIM1_CH1N/TIM3_CH2/PA7
RCC_MCO/TIM1_CH1/USART1_CK/PA8
DAC_EXTI9/TIM15_BKIN/TIM1_CH2/USART1_TX/PA9
TIM17_BKIN/TIM1_CH3/USART1_RX/PA10
ADC1_EXTI11/TIM1_CH4/USART1_CTS/PA11
TIM1_ETR/USART1_RTS/PA12
SYS_JTMS-SWDIO/PA13
SYS_JTCK-SWCLK/PA14
ADC1_EXTI15/SPI1_NSS/SYS_JTDI/TIM2_CH1/TIM2_ETR/PA15
ADC1_IN8/TIM1_CH2N/TIM3_CH3/PB0
ADC1_IN9/TIM1_CH3N/TIM3_CH4/PB1
BOOT1/PB2
SPI1_SCK/SYS_JTDO-TRACESWO/TIM2_CH2/PB3
SPI1_MISO/SYS_NJTRST/TIM3_CH1/PB4
I2C1_SMBA/SPI1_MOSI/TIM16_BKIN/TIM3_CH2/PB5
I2C1_SCL/TIM16_CH1N/TIM4_CH1/USART1_TX/PB6
I2C1_SDA/TIM17_CH1N/TIM4_CH2/USART1_RX/PB7
CEC/I2C1_SCL/TIM16_CH1/TIM4_CH3/PB8
DAC_EXTI9/I2C1_SDA/TIM17_CH1/TIM4_CH4/PB9
CEC/I2C2_SCL/TIM2_CH3/USART3_TX/PB10
ADC1_EXTI11/I2C2_SDA/TIM2_CH4/USART3_RX/PB11
I2C2_SMBA/SPI2_NSS/TIM1_BKIN/USART3_CK/PB12
SPI2_SCK/TIM1_CH1N/USART3_CTS/PB13
SPI2_MISO/TIM15_CH1/TIM1_CH2N/USART3_RTS/PB14
ADC1_EXTI15/SPI2_MOSI/TIM15_CH1N/TIM15_CH2/TIM1_CH3N/PB15
VDD
VDDA
VSS
VSSA
VDDAST
22pF
C403
12MHz
X401
C402
R33
LED
D9
CM1C
CM1A
CM1B
CM1D
CM2C
CM2A
CM2B
CM2D
TRIGG_3V3
ECHO
SAM_TX
SAM_RX
SEN1
SEN2
SEN3
SEN4
SEN5
SEN6
SEN7
SEN8
SRV1
SRV2
SRV3
SRV4
JTMS
JTCK
JTDI
JTDO
JTRST
I2C1_SCL
I2C1_SDA
DIR_M0
SP_M0
DIR_M1
SP_M1
L2
LST1

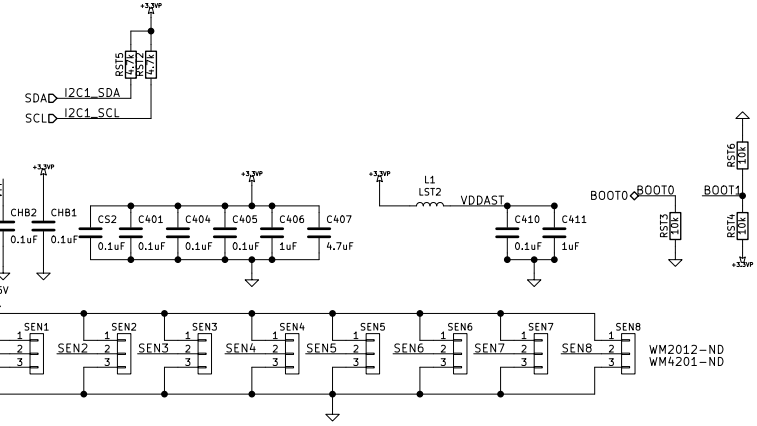
RST5
4.7k
RST7
4.7k
SDA
SCL
I2C1_SDA
I2C1_SCL
VM
CHB2
CHB1
0.1uF
CS2
C401
C404
C405
C406
C407
1uF
4.7uF
L1
LST2
VDDAST
C410
C411
BOOT0
RST3
10k
RST6
10k
RST4
10k
BOOT1
+5V
SEN1
SEN2
SEN3
SEN4
SEN5
SEN6
SEN7
SEN8
WM2012-ND
WM4201-ND

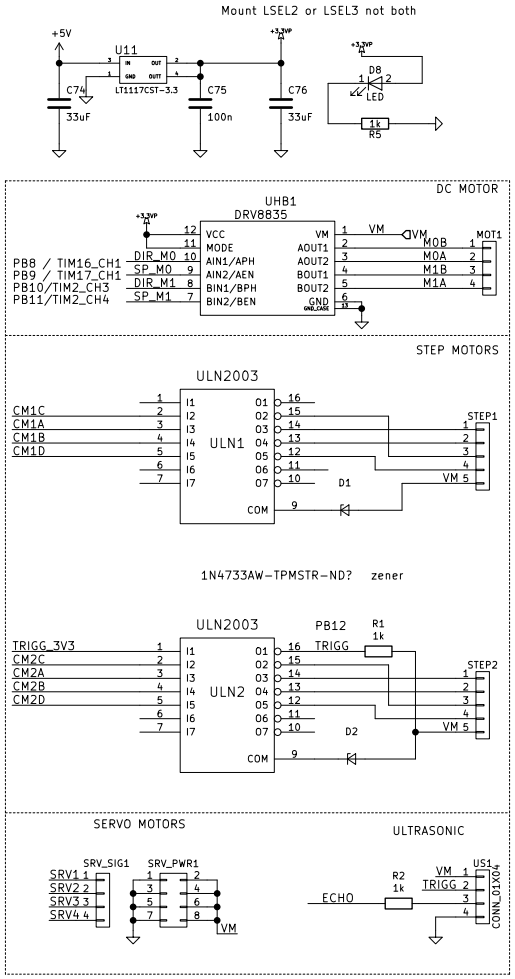
Mount LSEL2 or LSEL3 not both
+5V
U11
LT1117CST-3.3
C74
33uF
C75
100n
C76
33uF
D8
LED
R5
1k
DC MOTOR
UHB1
DRV8835
VCC
MODE
AIN1/APH
AIN2/AEN
BIN1/BPH
BIN2/BEN
VM
AOUT1
AOUT2
BOUT1
BOUT2
GND
PB8 / TIM16_CH1
PB9 / TIM17_CH1
PB10/TIM2_CH3
PB11/TIM2_CH4
DIR_M0
SP_M0
DIR_M1
SP_M1
MOB
MOA
M1B
M1A
MOT1
STEP MOTORS
ULN2003
ULN1
CM1C
CM1A
CM1B
CM1D
D1
STEP1
1N4733AW-TPMSTR-ND?
zener
ULN2
TRIGG_3V3
CM2C
CM2A
CM2B
CM2D
PB12
TRIGG
R1
1k
D2
STEP2
SERVO MOTORS
SRV_SIG1
SRV_PWR1
SRV1
SRV2
SRV3
SRV4
ULTRASONIC
ECHO
R2
1k
US1
CONN_01X04

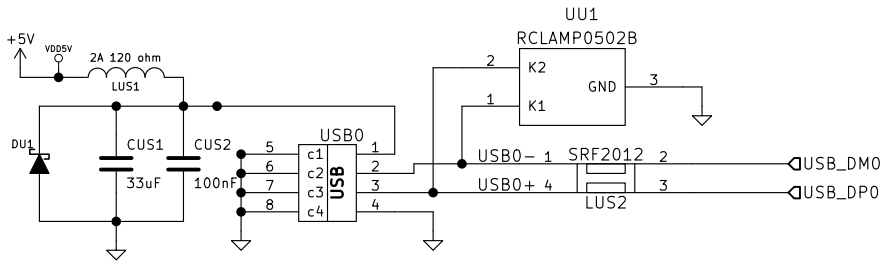
+5V
VDD5V
2A 120 ohm
LUS1
DU1
CUS1
33uF
CUS2
100nF
USB0
c1
c2
c3
c4
USB
5
6
7
8
1
2
3
4
UU1
RCLAMP0502B
K2
K1
GND
2
1
3
USB0− 1
USB0+ 4
SRF2012
LUS2
2
3
USB_DM0
USB_DP0