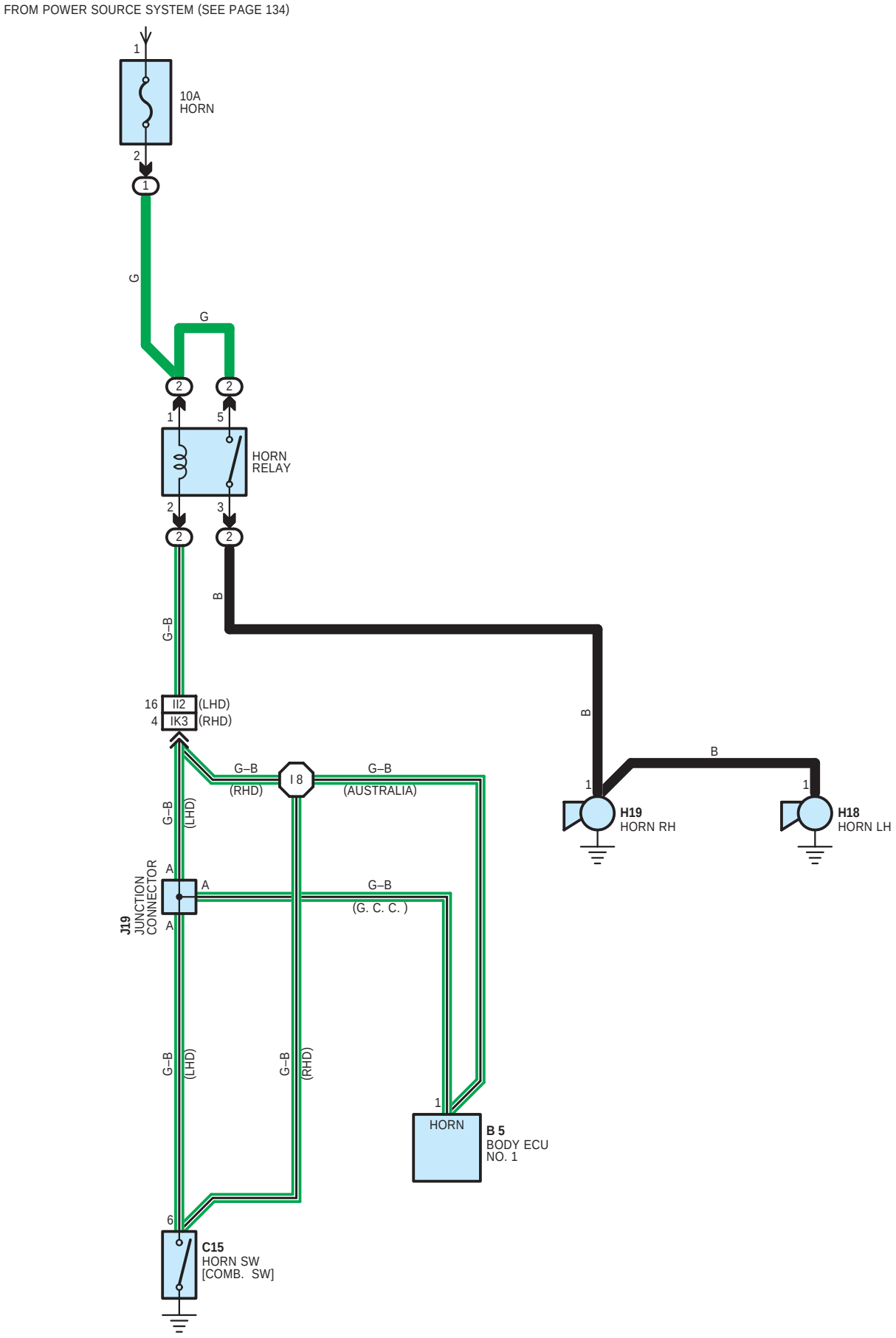
FROM POWER SOURCE SYSTEM (SEE PAGE 134)
10A
HORN
HORN
RELAY
G–B
(LHD)
(RHD)
(AUSTRALIA)
(G. C. C. )
J19
JUNCTION
CONNECTOR
H19
HORN RH
H18
HORN LH
HORN
B 5
BODY ECU
NO. 1
C15
HORN SW
[COMB. SW]