BENCH BED Bench

DESIGN BY OKHA

Image shows Natural Ash and Custom Leather

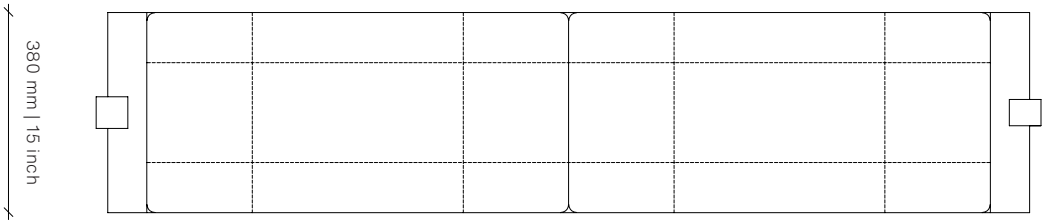

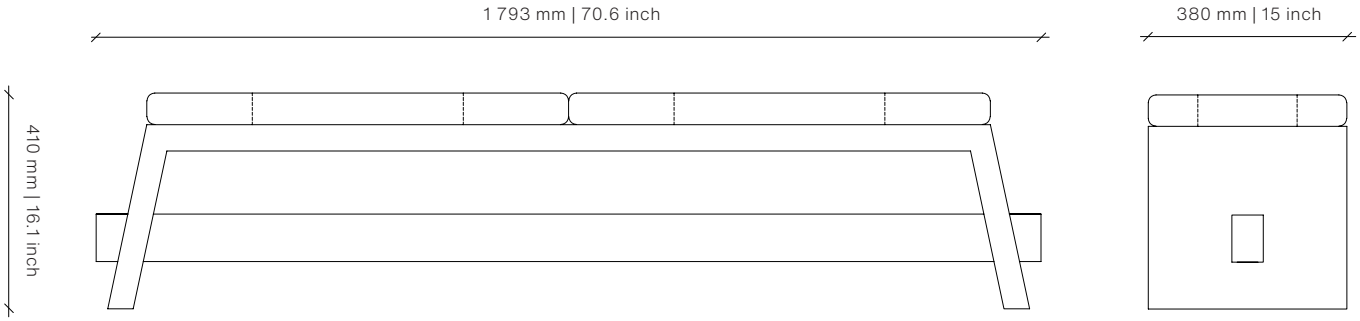

Frame

Natural Ash

Chalked Ash

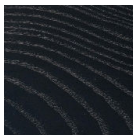

Carbon Ash

Dark Java Ash

Mocca Ash

Natural Walnut

Natural Oak

Carbon Oak

Dimensions (mm)
1793W x 380D x 410H

Dimensions (inches)
70.6W x 15D x 16.1H

COL 2.8 m^2 | 30.1 sq ft

Different textures, grains, colouration and densities are all natural characteristics of timbers. We find these variances an inherent and valuable part of the natural beauty of wood, no two pieces are the same making each OKHA design a unique, characterful piece and each product will be different from the next. Timber movement will also occur as this is a natural product.
STONE: Marble is a beautiful natural material with inherent imperfections in its structure, veining and coloration. As such, some slabs may be reinforced with meshing on the underside and may have colour matched resin fills in minor cracks and surface blemishes. Please note that this is standard practice.
METAL: All metals will go through a process of natural aging and oxidization due to environmental conditions. The result of this aging process will bring about colour change, to slow and reduce this natural process, appropriate cleaning and maintenance products can be used.

OKHA