o z o n e

PRODUCT SHEET: Classique V

Version: ENGLISH
Date: December 2025

DESCRIPTION: Chandelier. Structures in aluminium and brass. Medal bronze, mirror nickel or gun metal finish. White paper diffusing material.

Warm white 2700K LED lighting, or alternatively 2200K, 230W, 11000Lumens.

Optional *Dim to Warm*, warm white LED lighting from 1900K (low intensity) to 2500K (high intensity), 263W, 16000Lumens.

Converter 24V non-integrated, to be placed in a distant box.
Weight: 48kg - 106lbs
Size: 120x120x12cm - 47.2x47.2x4.7in + Height of the hanging structure
Compliance: CE Class III
Origin: France

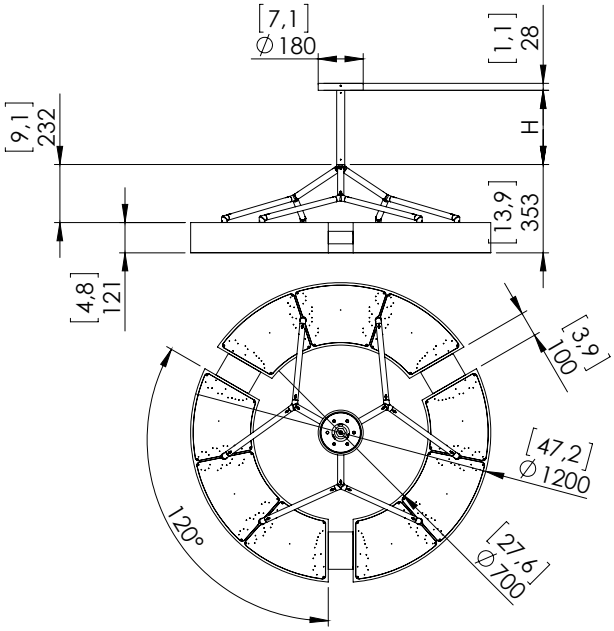

Dimensions in mm [inches]

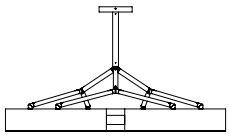

Silhouette : 175cm /69in