o z o n e

PRODUCT SHEET: LINE C110

Version: ENGLISH
Date: December 2025

DESCRIPTION: Ceiling lamp.
White lacquered aluminum structure. White paper diffusing material.

Warm white 2700K LED lighting, or alternatively 2200K, 72W, 3000Lumens.

Optional *Dim to Warm*, warm white LED lighting from 1900K (low intensity) to 2500K (high intensity), 83W, 5000Lumens.

Converter 24V non-integrated, to be placed in a distant box.
Weight: 14kg – 36.9lbs
Size: 90x90x12cm – 19.2x19.2x4.7in
Compliance: CE Class III
Origin: France

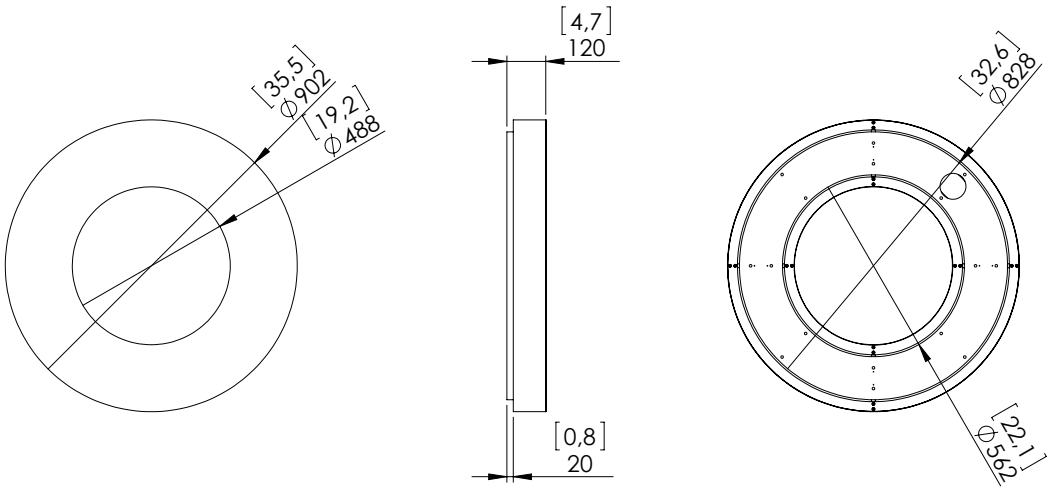

Dimensions in mm [inches]

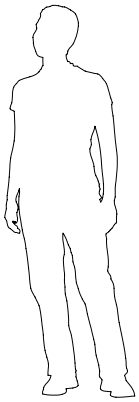

Silhouette : 175cm / 69in