NAZARÉ
SUSPENSION II

MATERIALS	EDITION	ARTISAN	YEAR
Bronze	12 pieces	Atelier François Pouenat	2021

DIMENSIONS & WEIGHT

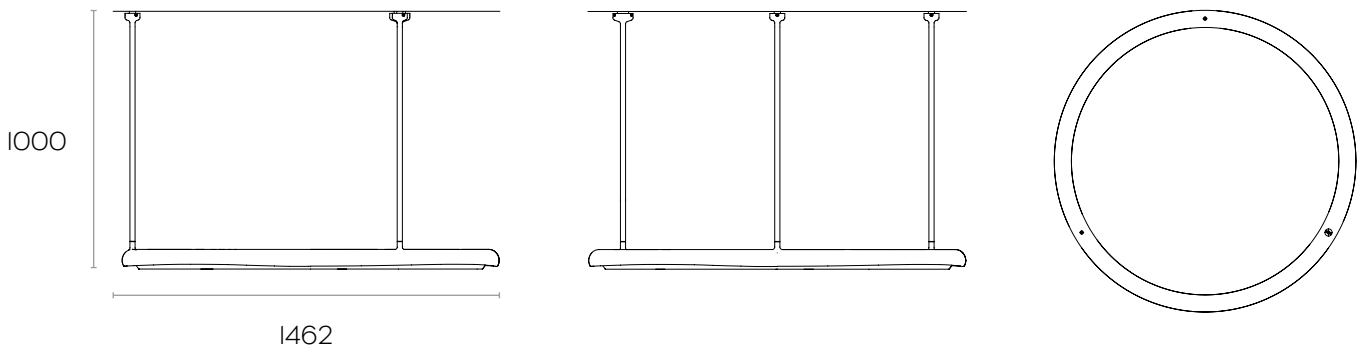

H 1000 x L 1462 x D 1462 mm
79.8 kg