REVERB Sofa

DESIGN BY OKHA

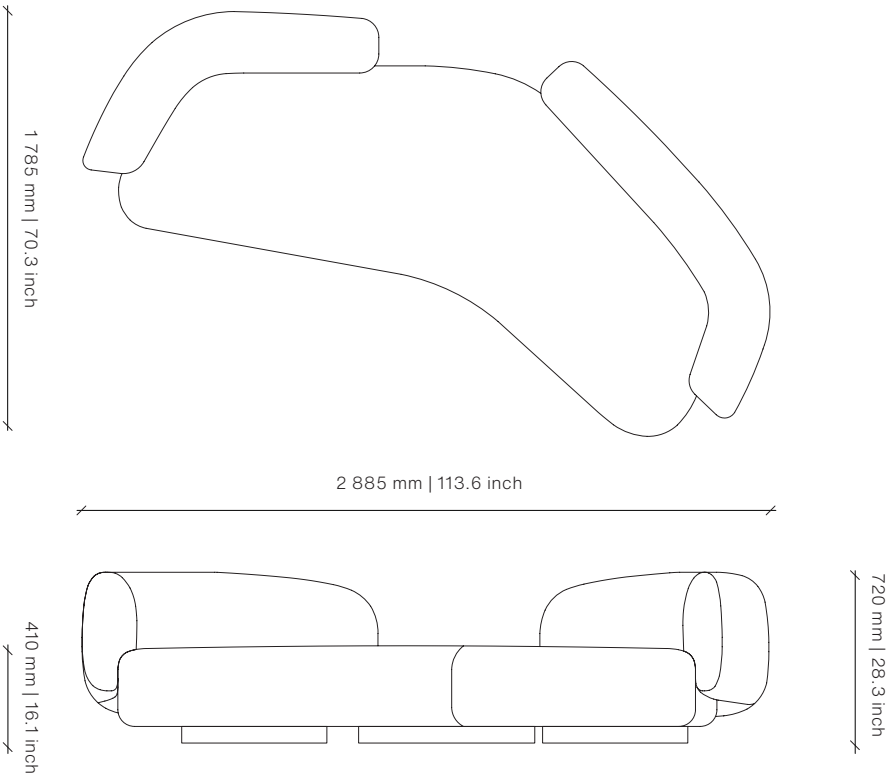

Image shows Brushed Brass and Custom Fabric

Plinth

Natural Ash Veneer

Chalked Ash Veneer

Carbon Ash Veneer

Dark Java Ash Veneer

Mocca Ash Veneer

Natural Walnut Veneer

Polished Brass

Brushed Brass

Brushed & Oxidized Brass

Polished Stainless Steel

Dimensions (mm)
2885W x 1785D x 720H
Seat Height: 410

Dimensions (inches)
113.6W x 70.3D x 28.3H
Seat Height: 16.1

COM 18 m | 19.7 yd

Different textures, grains, colouration and densities are all natural characteristics of timbers. We find these variances an inherent and valuable part of the natural beauty of wood, no two pieces are the same making each OKHA design a unique, characterful piece and each product will be different from the next. Timber movement will also occur as this is a natural product.
STONE: Marble is a beautiful natural material with inherent imperfections in its structure, veining and coloration. As such, some slabs may be reinforced with meshing on the underside and may have colour matched resin fills in minor cracks and surface blemishes. Please note that this is standard practice.
METAL: All metals will go through a process of natural aging and oxidization due to environmental conditions. The result of this aging process will bring about colour change, to slow and reduce this natural process, appropriate cleaning and maintenance products can be used.

OKHA