EU **mm [in]**

SCONCE
MARTEL 300 RC

Design Felix Millory

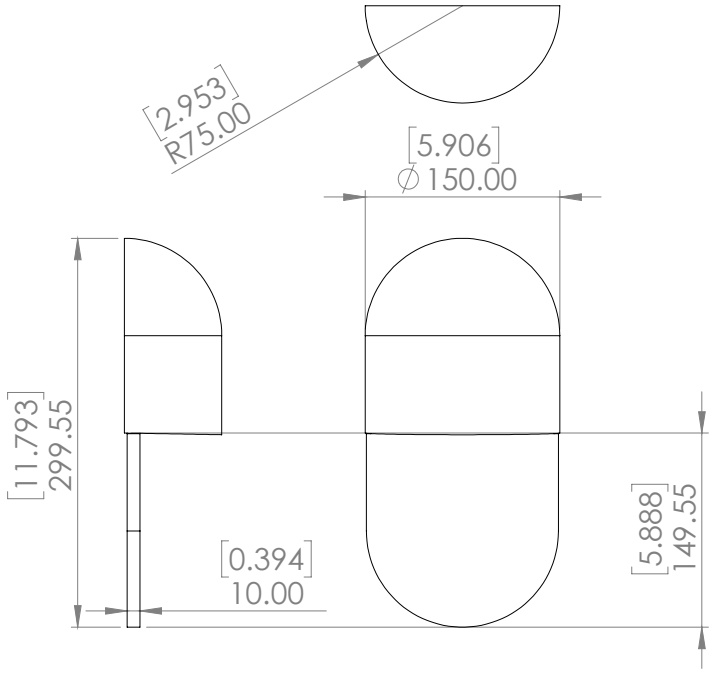

Reference

WLML300RC

Description

Patinated bronze body -Protective varnish - Alabaster diffuser

Handmade in France

Specificity

Led Sources	**COB**	**220-240V / 50-60hz / 24V**
Lumens	**700 lm (nominal)**	
Watts	**6W**	
Weight kg (lbs)	**2.7 [6]**	
Standard	CE, CRI-Ra 98, 220-240V 50-60HZ, LED, IP20*, ▢	
Colors	2700K*, 3000K, 4000K	
Dimming	Triac*, 0.10V, Dali	
Driver Position	INSIDE, INSIDE, INSIDE	

*Factory setting**

Fixation

×1

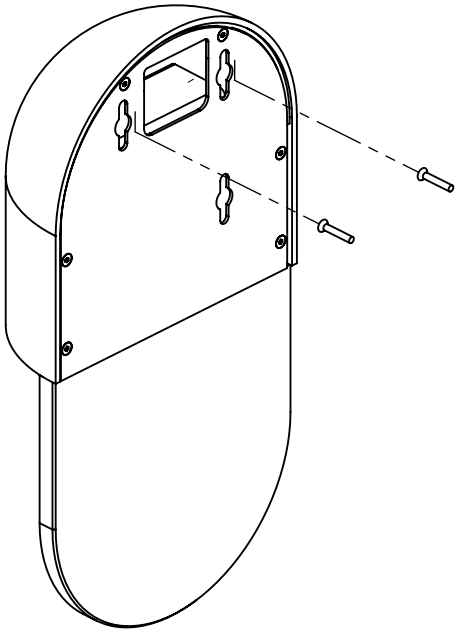

Bronze Finishing

Patinas

FNRB RAW BRONZE

FNMB MEDIUM BRONZE

FNBK BLACK BRONZE

Special

FNBN BRUSHED NICKEL

CUSTOM FINISHING ON DEMAND

Alabasters

Type

WHITE VEIN

BROWN VEIN

ENTRELACS