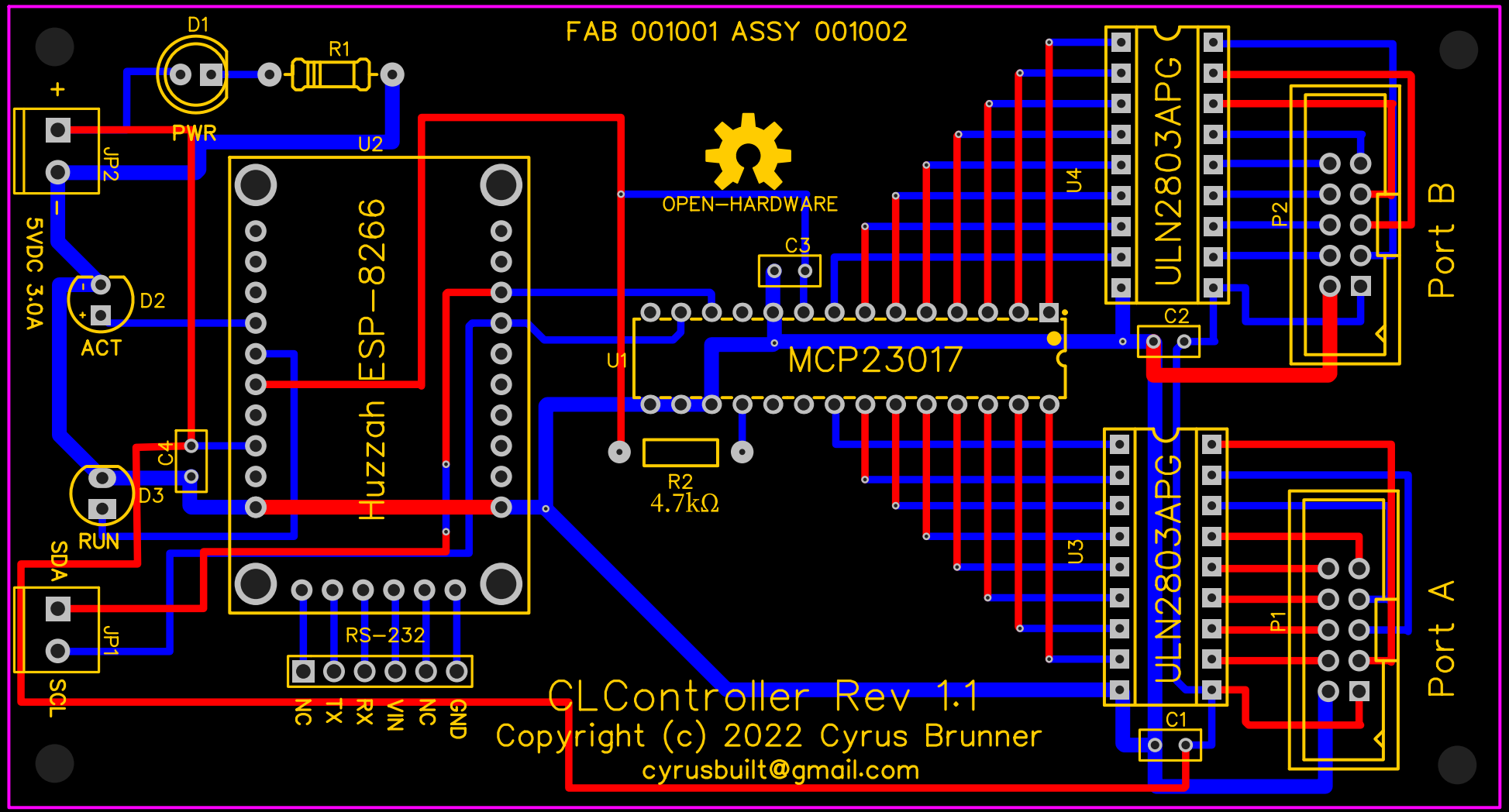
FAB 001001 ASSY 001002
D1
R1
PWR
U2
JP2
+
−
5VDC 3.0A
D2
ACT
D3
RUN
C4
SDA
SCL
JP1
Huzzah ESP-8266
RS-232
NC
TX
RX
VIN
NC
GND
OPEN-HARDWARE
C3
U1
MCP23017
R2
4.7kΩ
U4
U3
ULN2803APG
ULN2803APG
C2
C1
P2
P1
Port B
Port A
CLController Rev 1.1
Copyright (c) 2022 Cyrus Brunner
cyrusbuilt@gmail.com