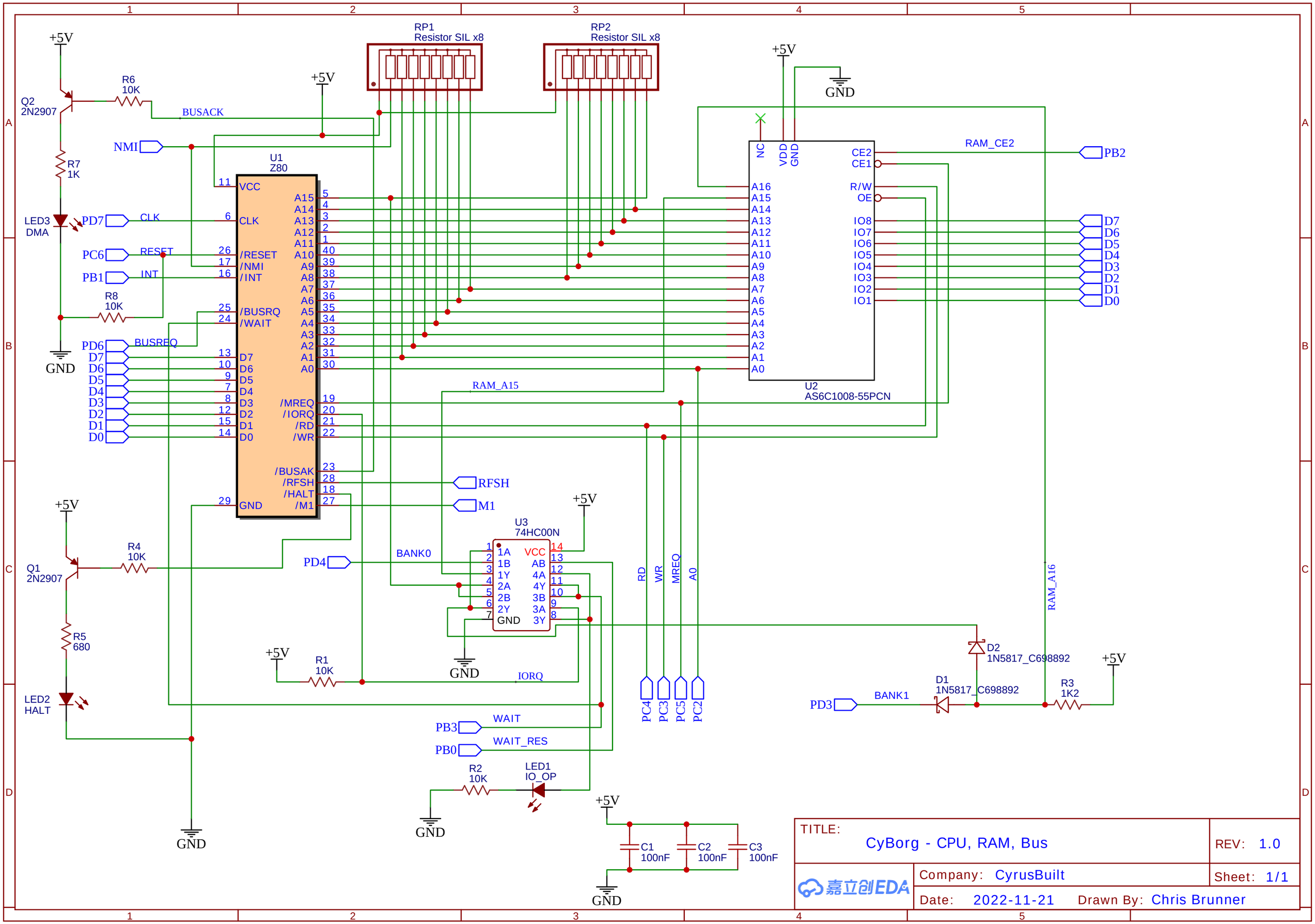
RP1
Resistor SIL x8
RP2
Resistor SIL x8
+5V
GND
Q2
2N2907
R6
10K
BUSACK
NMI
R7
1K
LED3
DMA
PD7
CLK
PC6
RESET
PB1
INT
R8
10K
PD6
BUSREQ
D7
D6
D5
D4
D3
D2
D1
D0
U1
Z80
VCC
CLK
/RESET
/NMI
/INT
/BUSRQ
/WAIT
GND
A15
A14
A13
A12
A11
A10
A9
A8
A7
A6
A5
A4
A3
A2
A1
A0
/MREQ
/IORQ
/RD
/WR
/BUSAK
/RFSH
/HALT
/M1
RAM_A15
RFSH
M1
Q1
2N2907
R4
10K
R5
680
LED2
HALT
PD4
BANK0
U3
74HC00N
1A
1B
1Y
2A
2B
2Y
GND
VCC
AB
4A
4Y
3B
3A
3Y
R1
10K
IORQ
PB3
WAIT
PB0
WAIT_RES
R2
10K
LED1
IO_OP
C1
100nF
C2
100nF
C3
100nF
U2
AS6C1008-55PCN
NC
VDD
GND
CE2
CE1
R/W
OE
IO8
IO7
IO6
IO5
IO4
IO3
IO2
IO1
RAM_CE2
PB2
RD
WR
MREQ
A0
PC4
PC3
PC5
PC2
RAM_A16
D2
1N5817_C698892
D1
1N5817_C698892
PD3
BANK1
R3
1K2
TITLE:
CyBorg - CPU, RAM, Bus
REV: 1.0
Company: CyrusBuilt
Sheet: 1/1
Date: 2022-11-21
Drawn By: Chris Brunner
嘉立创EDA

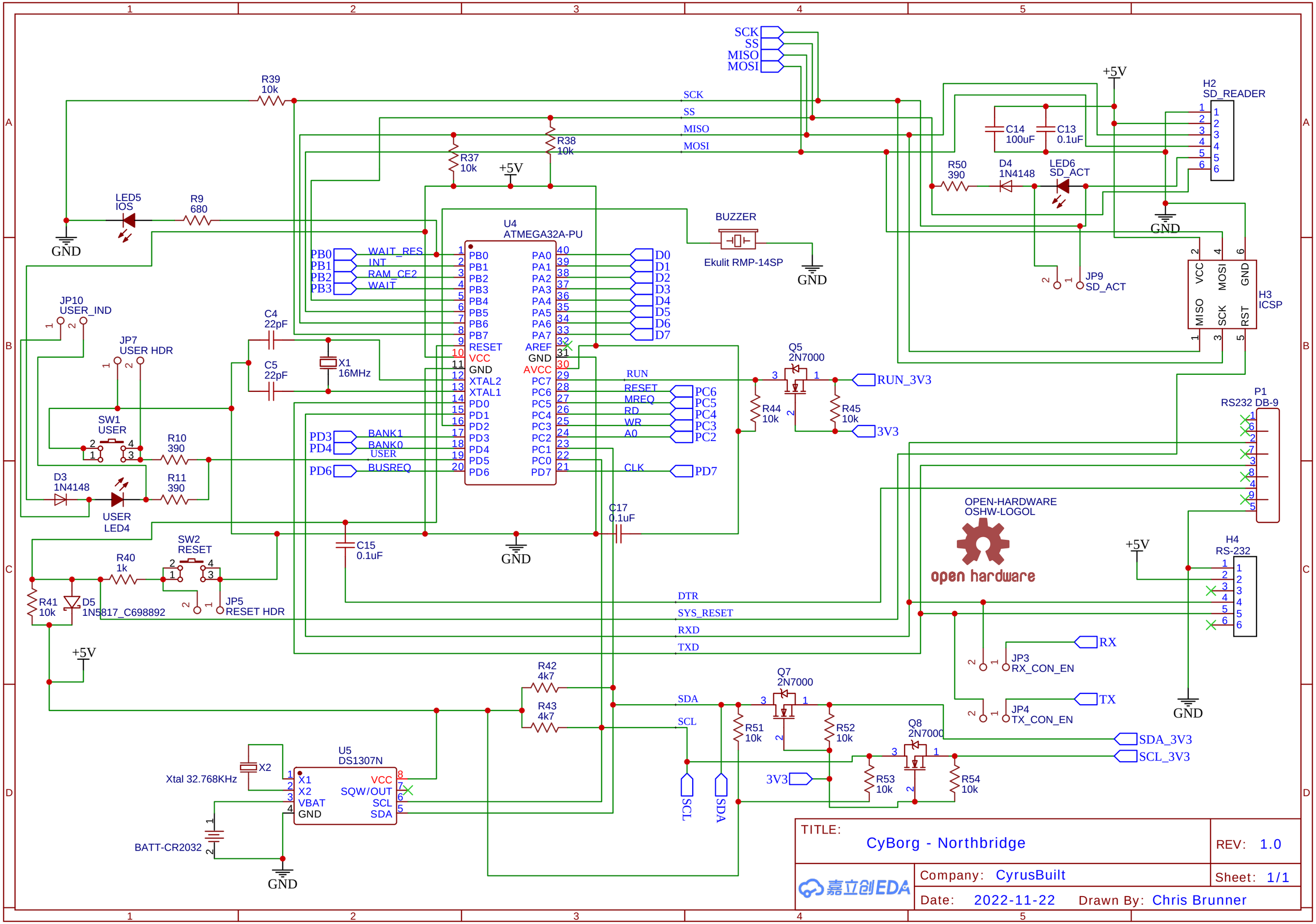
SCK
SS
MISO
MOSI
R39
10k
R38
10k
R37
10k
+5V
LED5
IOS
R9
680
GND
U4
ATMEGA32A-PU
PB0
PB1
PB2
PB3
WAIT_RES
INT
RAM_CE2
WAIT
PA0
PA1
PA2
PA3
PA4
PA5
PA6
PA7
D0
D1
D2
D3
D4
D5
D6
D7
RESET
VCC
GND
XTAL2
XTAL1
PD0
PD1
PD2
PD3
PD4
PD5
PD6
AREF
AVCC
PC7
PC6
PC5
PC4
PC3
PC2
PC1
PC0
PD7
BUZZER
Ekulit RMP-14SP
H2
SD_READER
C14
100uF
C13
0.1uF
R50
390
D4
1N4148
LED6
SD_ACT
JP9
SD_ACT
H3
ICSP
VCC
MOSI
GND
MISO
SCK
RST
JP10
USER_IND
JP7
USER HDR
C4
22pF
C5
22pF
X1
16MHz
SW1
USER
R10
390
D3
1N4148
R11
390
USER
LED4
PD3
PD4
PD6
BANK1
BANK0
USER
BUSREQ
RUN
RESET
MREQ
RD
WR
A0
CLK
PC6
PC5
PC4
PC3
PC2
PD7
Q5
2N7000
R44
10k
R45
10k
RUN_3V3
3V3
P1
RS232 DB-9
C17
0.1uF
C15
0.1uF
OPEN-HARDWARE
OSHW-LOGOL
open hardware
H4
RS-232
SW2
RESET
R40
1k
R41
10k
D5
1N5817_C698892
JP5
RESET HDR
DTR
SYS_RESET
RXD
TXD
RX
JP3
RX_CON_EN
TX
JP4
TX_CON_EN
R42
4k7
R43
4k7
SDA
SCL
Q7
2N7000
R51
10k
R52
10k
Q8
2N7000
R53
10k
R54
10k
SDA_3V3
SCL_3V3
U5
DS1307N
X2
Xtal 32.768KHz
X1
X2
VBAT
GND
VCC
SQW/OUT
SCL
SDA
BATT-CR2032
TITLE:
CyBorg - Northbridge
REV: 1.0
Company: CyrusBuilt
Sheet: 1/1
Date: 2022-11-22
Drawn By: Chris Brunner
嘉立创EDA

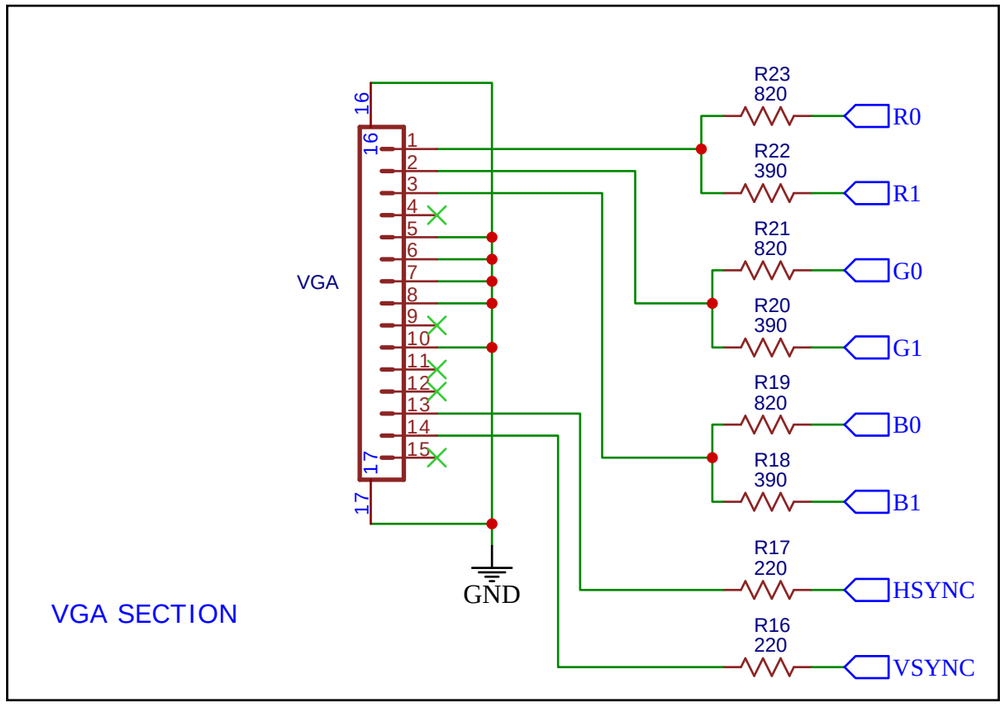

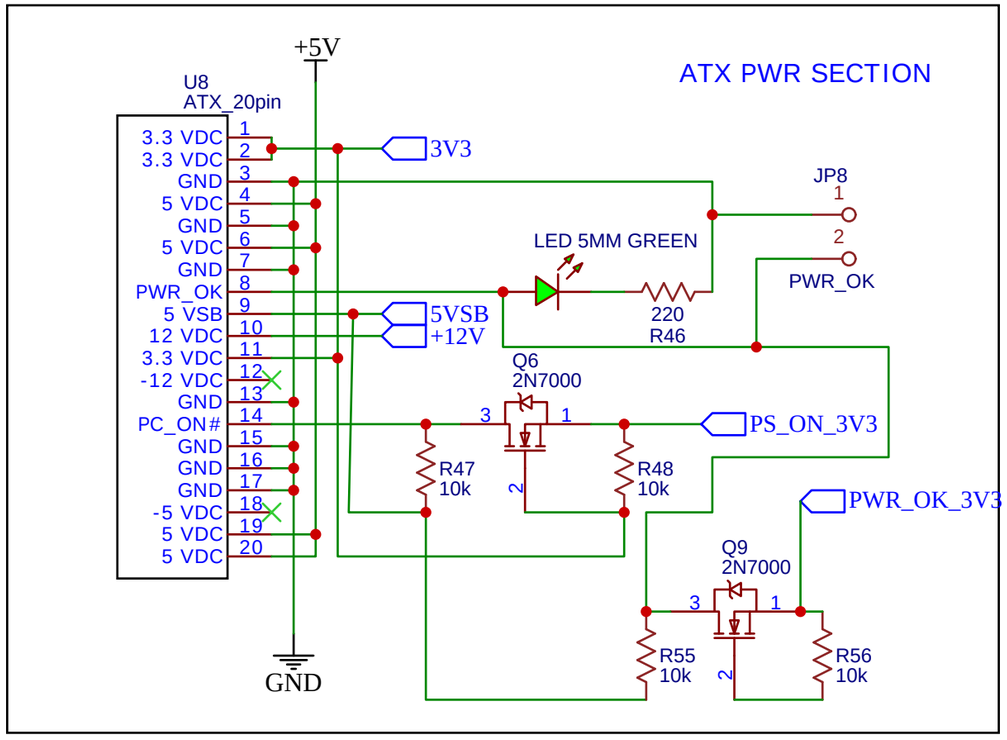

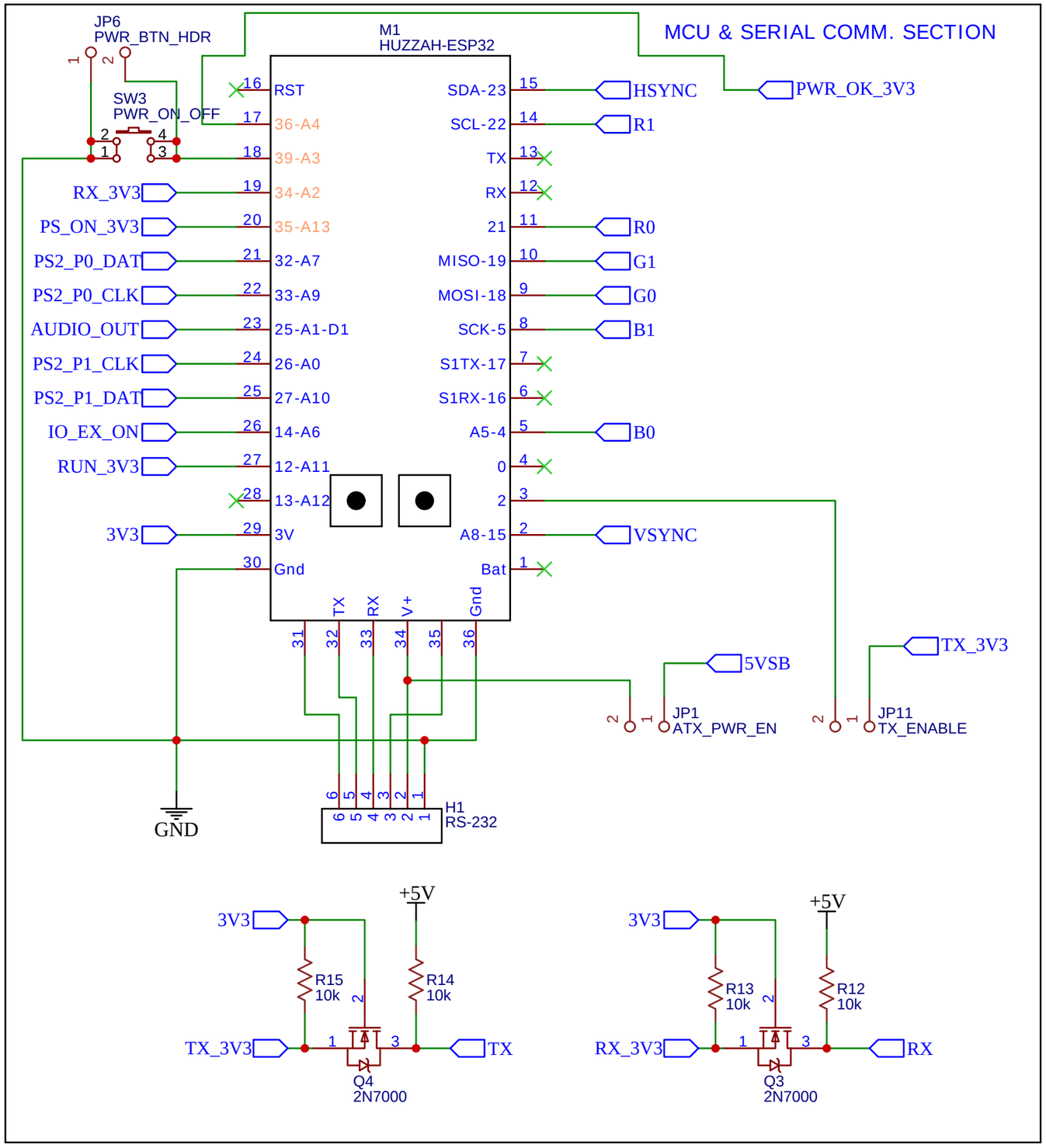

TITLE: CyBorg - Southbridge - MCU & VGA		REV: 1.1
嘉立创EDA	Company: CyrusBuilt	Sheet: 1/1
	Date: 2022-11-23 Drawn By: Chris Brunner	

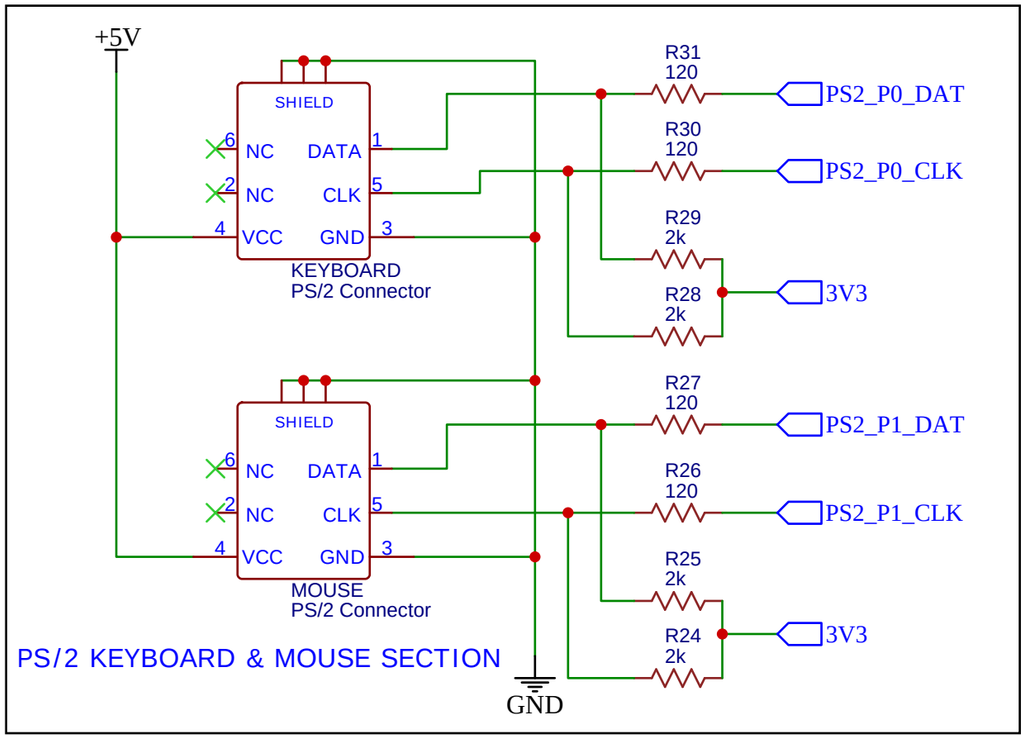

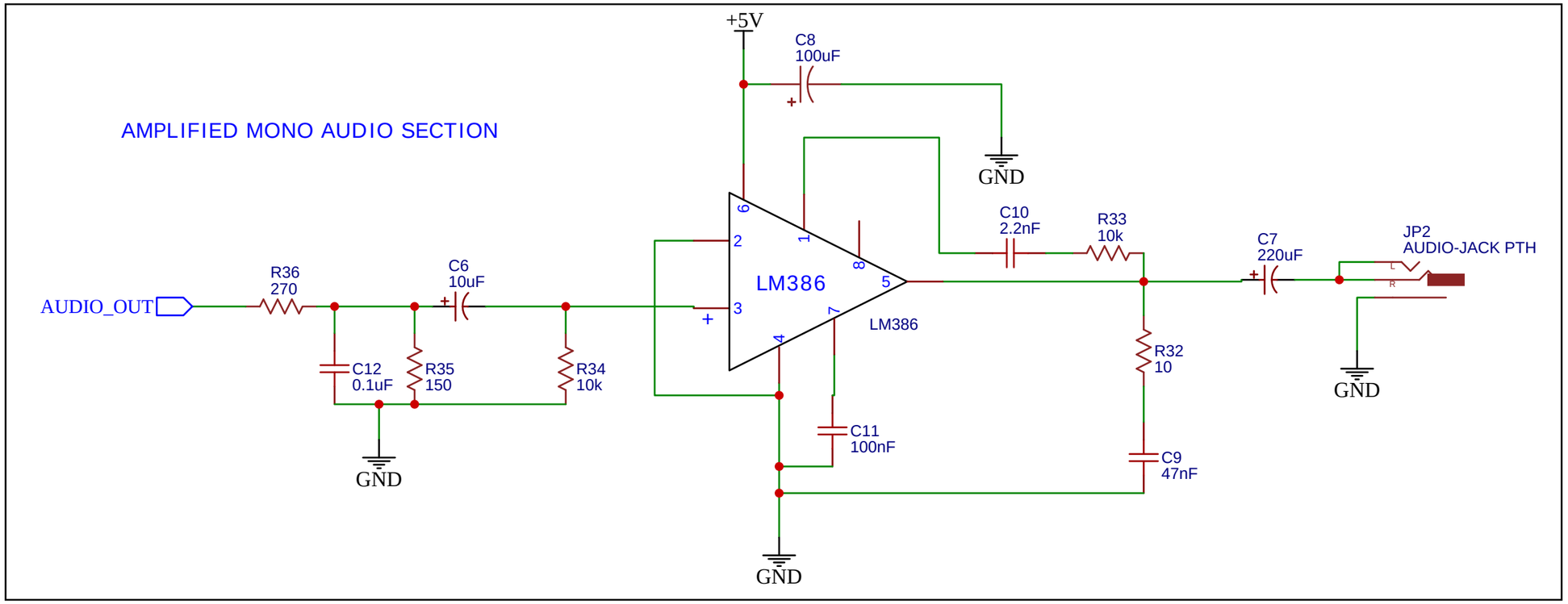

TITLE: CyBorg - Southbridge - Audio & PS/2		REV: 1.0
嘉立创EDA	Company: CyrusBuilt	Sheet: 1/1
	Date: 2022-11-23 Drawn By: Chris Brunner	

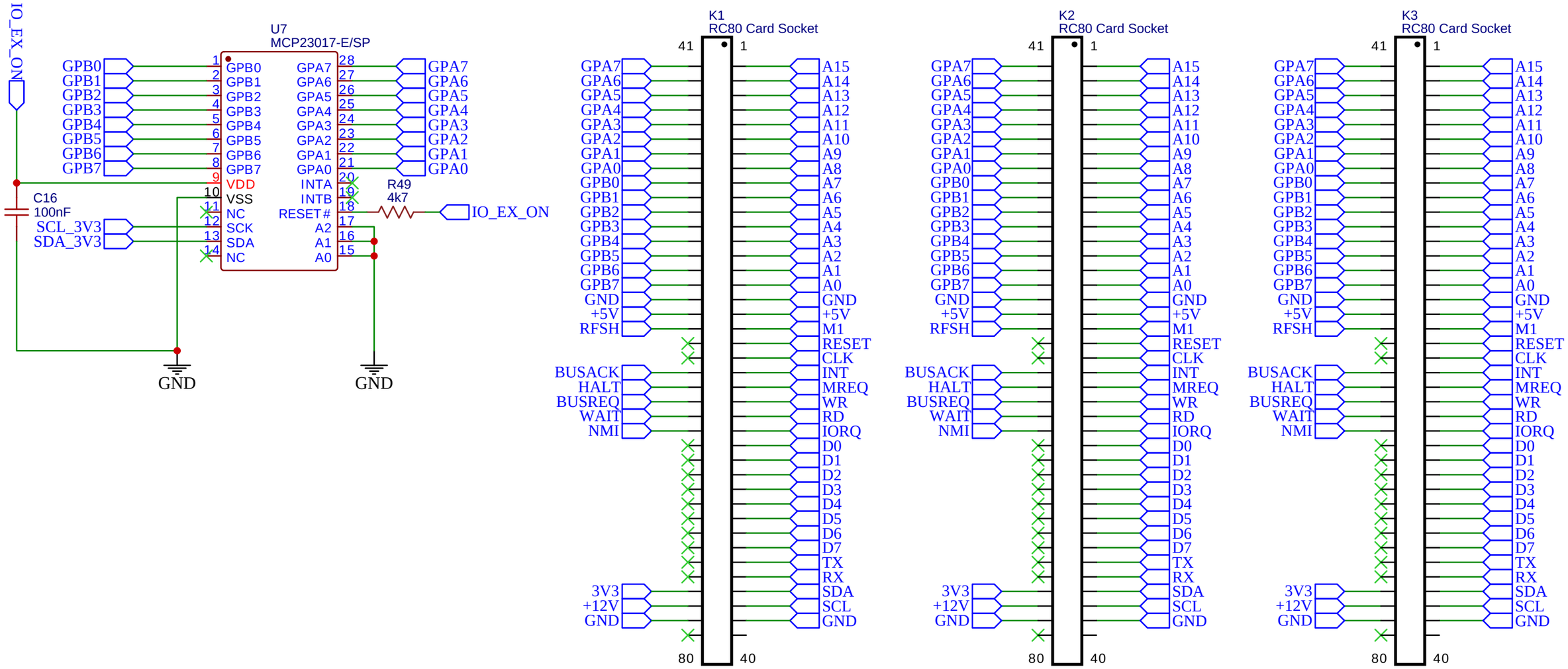

TITLE: CyBorg - Expansion Bus		REV: 1.0
嘉立创EDA	Company: CyrusBuilt	Sheet: 1/1
	Date: 2022-11-24 Drawn By: Chris Brunner	