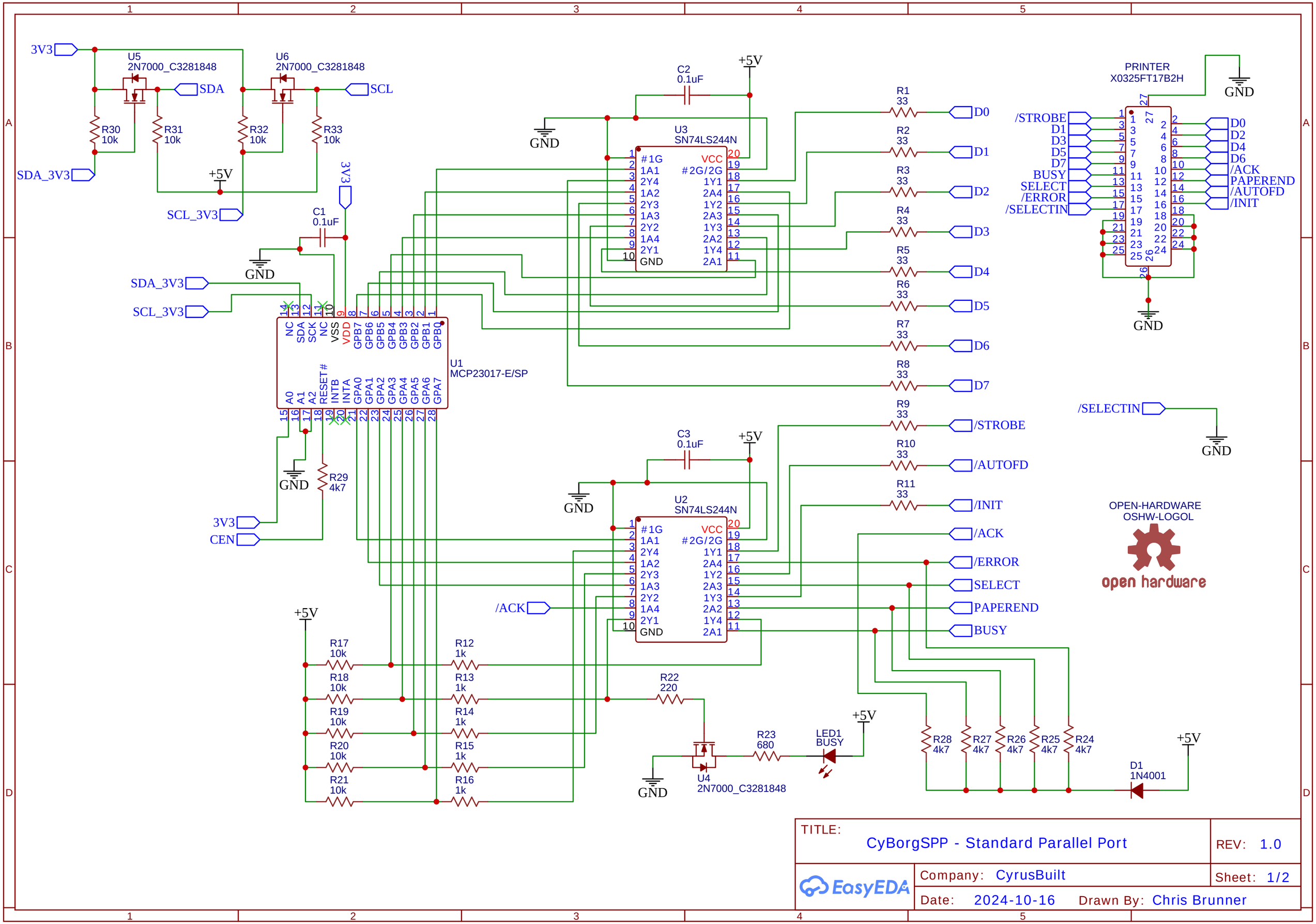

TITLE: CyBorgSPP - Standard Parallel Port	REV: 1.0
EasyEDA	Company: CyrusBuilt
	Sheet: 1/2
	Date: 2024-10-16 Drawn By: Chris Brunner

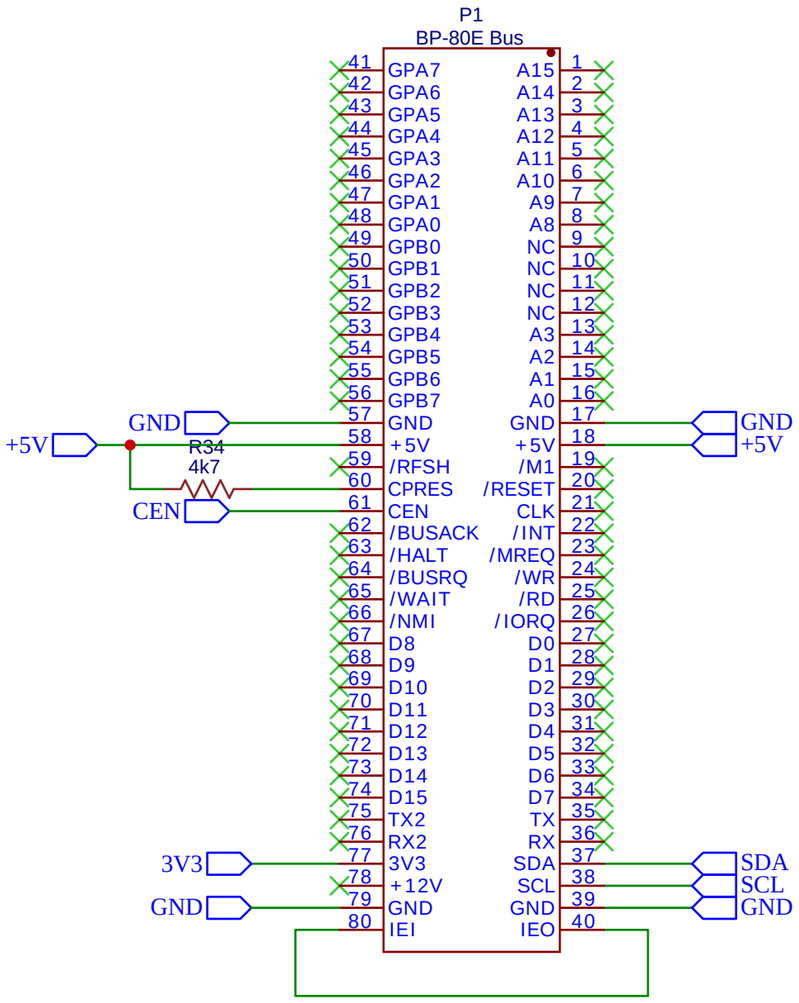

TITLE: CyBorgSPP - Bus Connector		REV: 1.0
EasyEDA	Company: CyrusBuilt	Sheet: 2/2
	Date: 2024-11-04 Drawn By: Chris Brunner	