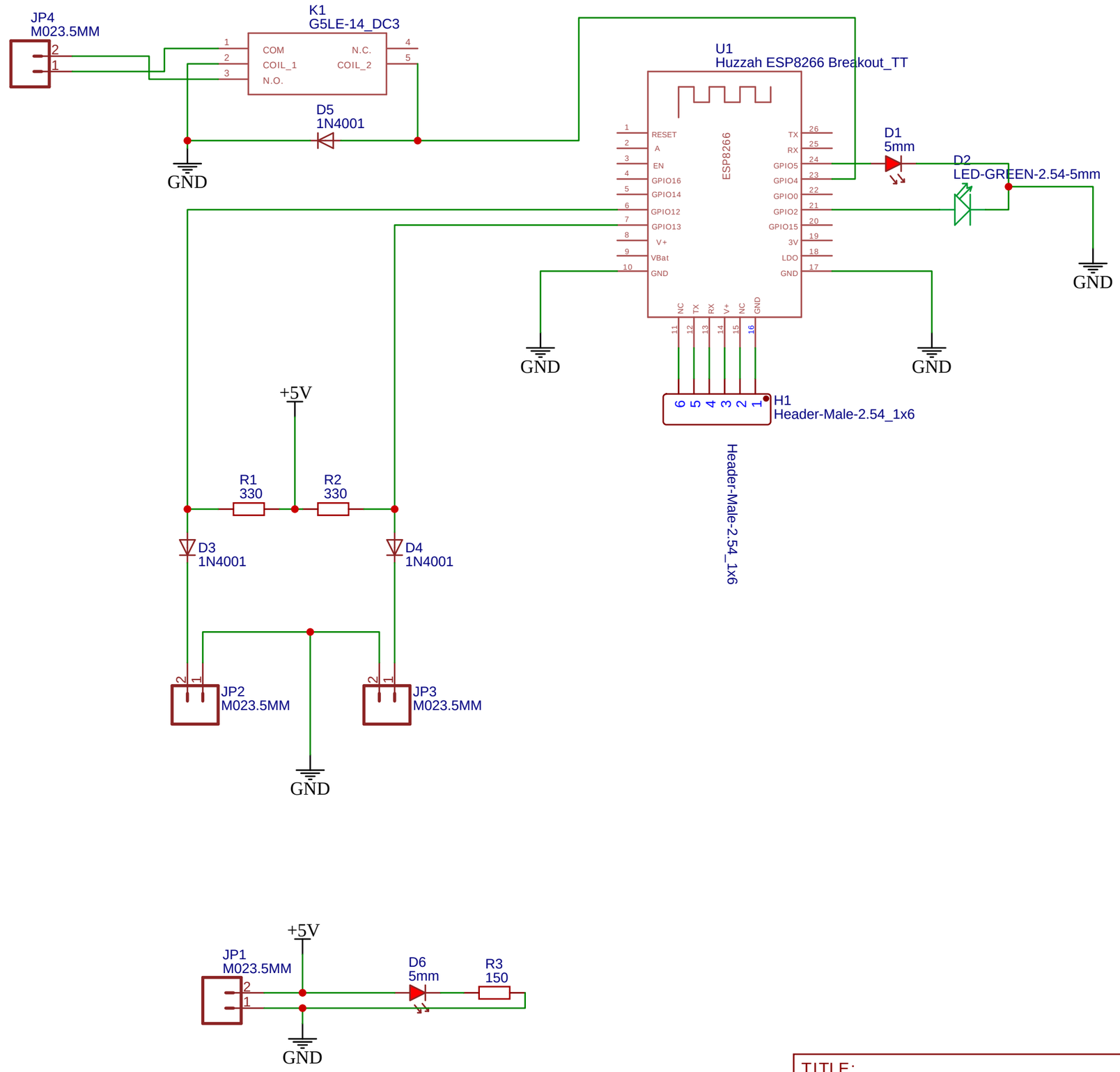

TITLE: CyGarage Model 1 (Single Door)		REV: 1.4
EasyEDA	Company: CyrusBuilt	Sheet: 1/1
	Date: 2022-08-22 Drawn By: Cyrus Brunner	