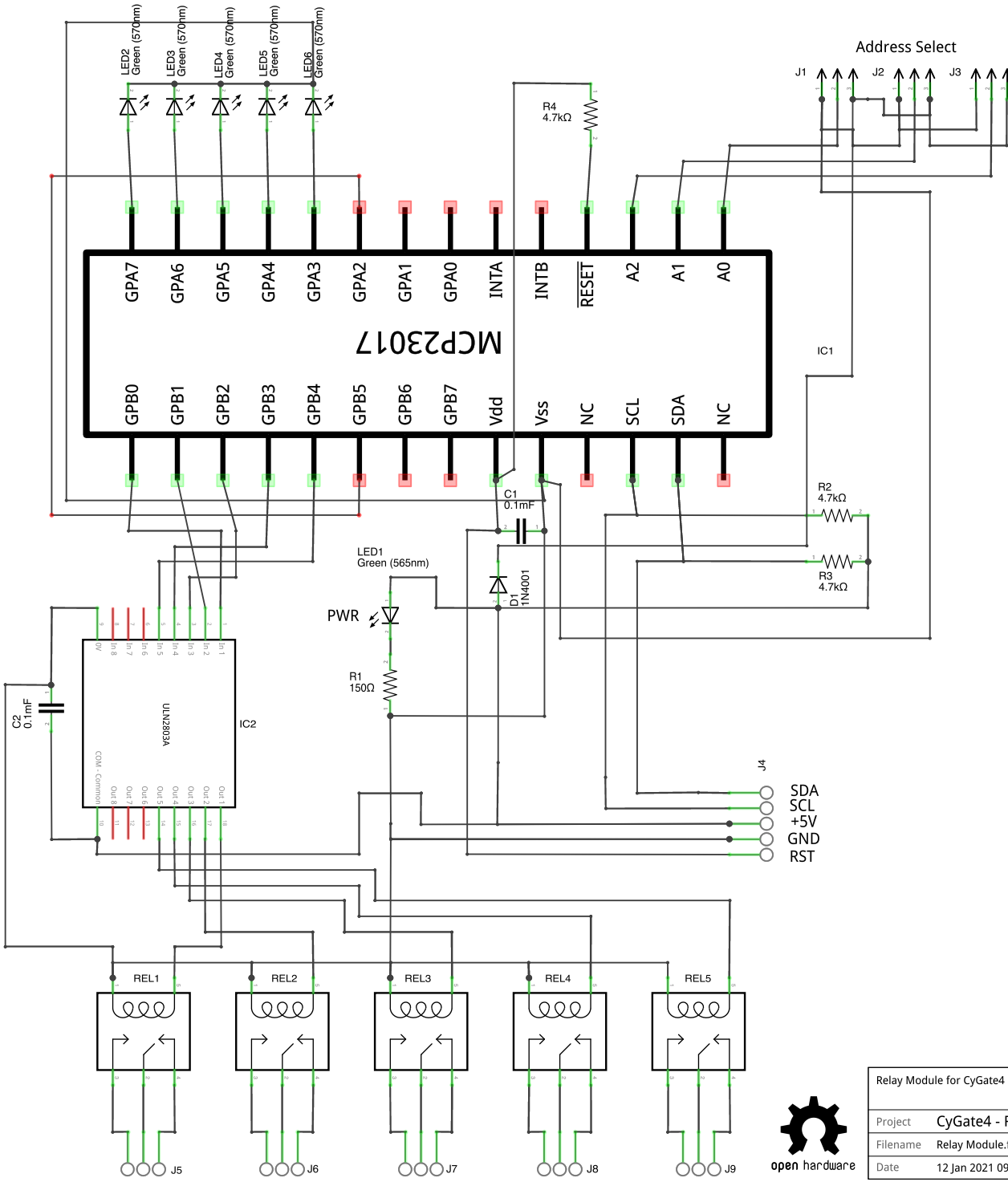
LED2 Green (570nm)
LED3 Green (570nm)
LED4 Green (570nm)
LED5 Green (570nm)
LED6 Green (570nm)
Address Select
J1
J2
J3
R4 4.7kΩ
MCP23017
GPA7
GPA6
GPA5
GPA4
GPA3
GPA2
GPA1
GPA0
INTA
INTB
RESET
A2
A1
A0
GPB0
GPB1
GPB2
GPB3
GPB4
GPB5
GPB6
GPB7
Vdd
Vss
NC
SCL
SDA
NC
IC1
C1 0.1mF
R2 4.7kΩ
R3 4.7kΩ
LED1 Green (565nm)
D1 1N4001
PWR
R1 150Ω
C2 0.1mF
ULN2803A
IC2
J4
SDA
SCL
+5V
GND
RST
REL1
REL2
REL3
REL4
REL5
J5
J6
J7
J8
J9
open hardware
Relay Module for CyGate4
Project CyGate4 - Relay Module
Filename Relay Module.fzz
Rev 1.1
Date 12 Jan 2021 09:51:21
Sheet 1/1
fritzing