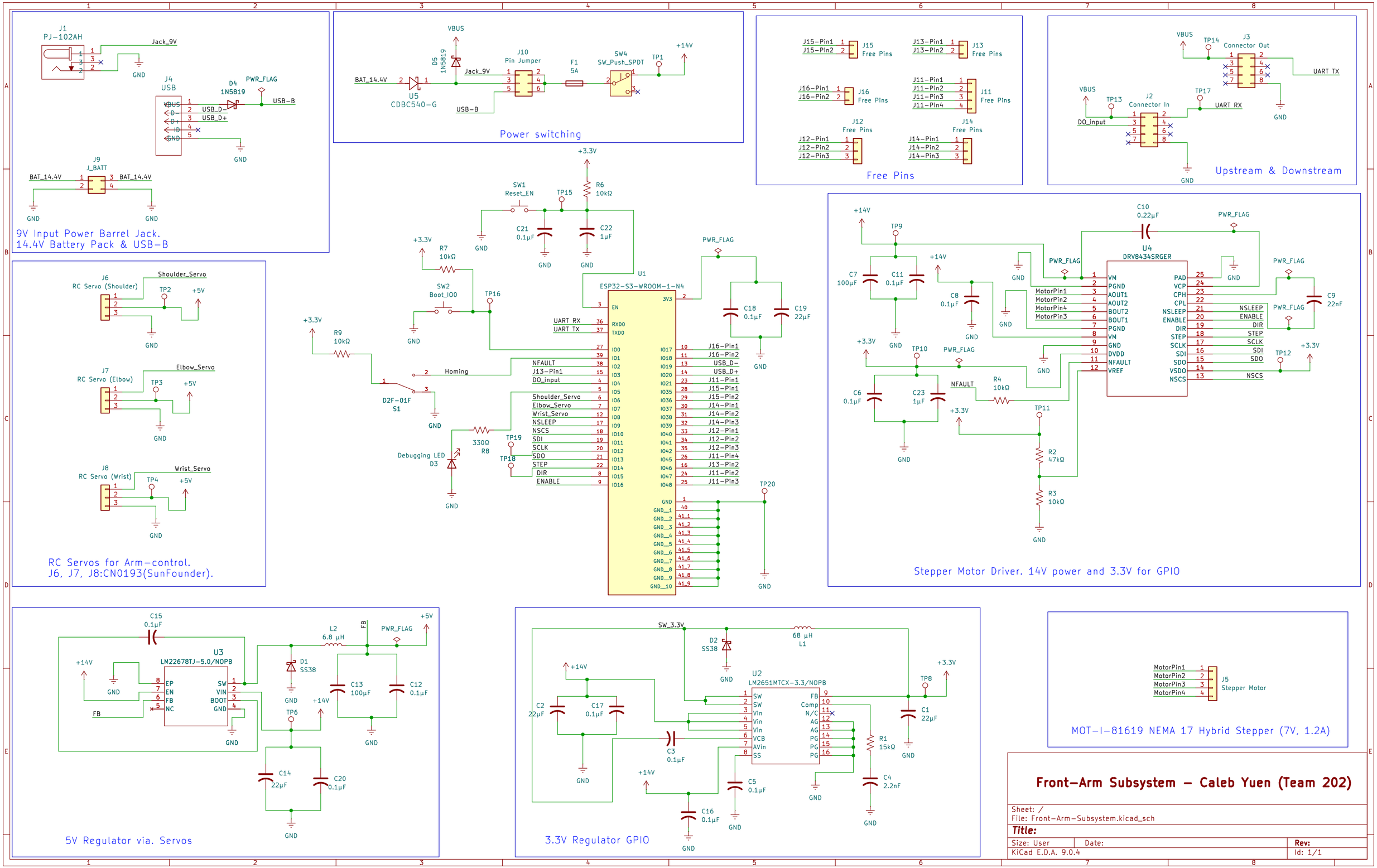
9V Input Power Barrel Jack.
14.4V Battery Pack & USB-B
J1
PJ-102AH
Jack_9V
GND
J4
USB
D4
1N5819
PWR_FLAG
USB-B
USB_D-
USB_D+
J9
J_BATT
BAT_14.4V
Power switching
VBUS
D5
1N5819
J10
Pin Jumper
F1
5A
SW4
SW_Push_SPDT
TP1
+14V
U5
CDBC540-G
Free Pins
J15-Pin1
J15-Pin2
J15
J16-Pin1
J16-Pin2
J16
J12-Pin1
J12-Pin2
J12-Pin3
J12
J13-Pin1
J13-Pin2
J13
J11-Pin1
J11-Pin2
J11-Pin3
J11-Pin4
J11
J14-Pin1
J14-Pin2
J14-Pin3
J14
Upstream & Downstream
J3
Connector Out
UART TX
TP14
J2
Connector In
DO_input
TP13
TP17
UART RX
RC Servos for Arm-control.
J6, J7, J8:CN0193(SunFounder).
J6
RC Servo (Shoulder)
Shoulder_Servo
TP2
+5V
J7
RC Servo (Elbow)
Elbow_Servo
TP3
J8
RC Servo (Wrist)
Wrist_Servo
TP4
+3.3V
R6
10kΩ
SW1
Reset_EN
TP15
C21
0.1µF
C22
1µF
R7
10kΩ
SW2
Boot_IO0
TP16
R9
10kΩ
D2F-01F
S1
Homing
U1
ESP32-S3-WROOM-1-N4
UART RX
UART TX
NFAULT
J13-Pin1
DO_input
Shoulder_Servo
Elbow_Servo
Wrist_Servo
NSLEEP
NSCS
SDI
SCLK
SDO
STEP
DIR
ENABLE
330Ω
R8
TP19
TP18
Debugging LED
D3
C18
0.1µF
C19
22µF
J16-Pin1
J16-Pin2
USB_D-
USB_D+
J11-Pin1
J15-Pin1
J15-Pin2
J14-Pin1
J14-Pin2
J14-Pin3
J12-Pin1
J12-Pin2
J12-Pin3
J11-Pin4
J13-Pin2
J11-Pin2
J11-Pin3
TP20
Stepper Motor Driver. 14V power and 3.3V for GPIO
C10
0.22µF
U4
DRV8434SRGER
C7
100µF
C11
0.1µF
C8
0.1µF
MotorPin1
MotorPin2
MotorPin4
MotorPin3
VM
PGND
AOUT1
AOUT2
BOUT2
BOUT1
GND
DVDD
NFAULT
VREF
PAD
VCP
CPH
CPL
NSLEEP
ENABLE
DIR
STEP
SCLK
SDI
SDO
VSDO
NSCS
C9
22nF
TP9
TP10
TP11
TP12
C6
0.1µF
C23
1µF
R4
10kΩ
R2
47kΩ
R3
10kΩ
5V Regulator via. Servos
C15
0.1µF
U3
LM22678TJ-5.0/NOPB
EP
EN
FB
NC
SW
VIN
BOOT
L2
6.8 µH
D1
SS38
C13
100µF
C12
0.1µF
TP6
C14
22µF
C20
0.1µF
3.3V Regulator GPIO
SW_3.3V
D2
SS38
68 µH
L1
U2
LM2651MTCX-3.3/NOPB
SW
Vin
VCB
AVin
SS
FB
Comp
N/C
AG
PG
C2
22µF
C17
0.1µF
C3
0.1µF
C5
0.1µF
C16
0.1µF
TP8
C1
22µF
R1
15kΩ
C4
2.2nF
MOT-I-81619 NEMA 17 Hybrid Stepper (7V, 1.2A)
J5
Stepper Motor
Front-Arm Subsystem - Caleb Yuen (Team 202)
Sheet: /
File: Front-Arm-Subsystem.kicad_sch
Title:
Size: User
Date:
Rev:
KiCad E.D.A. 9.0.4
Id: 1/1