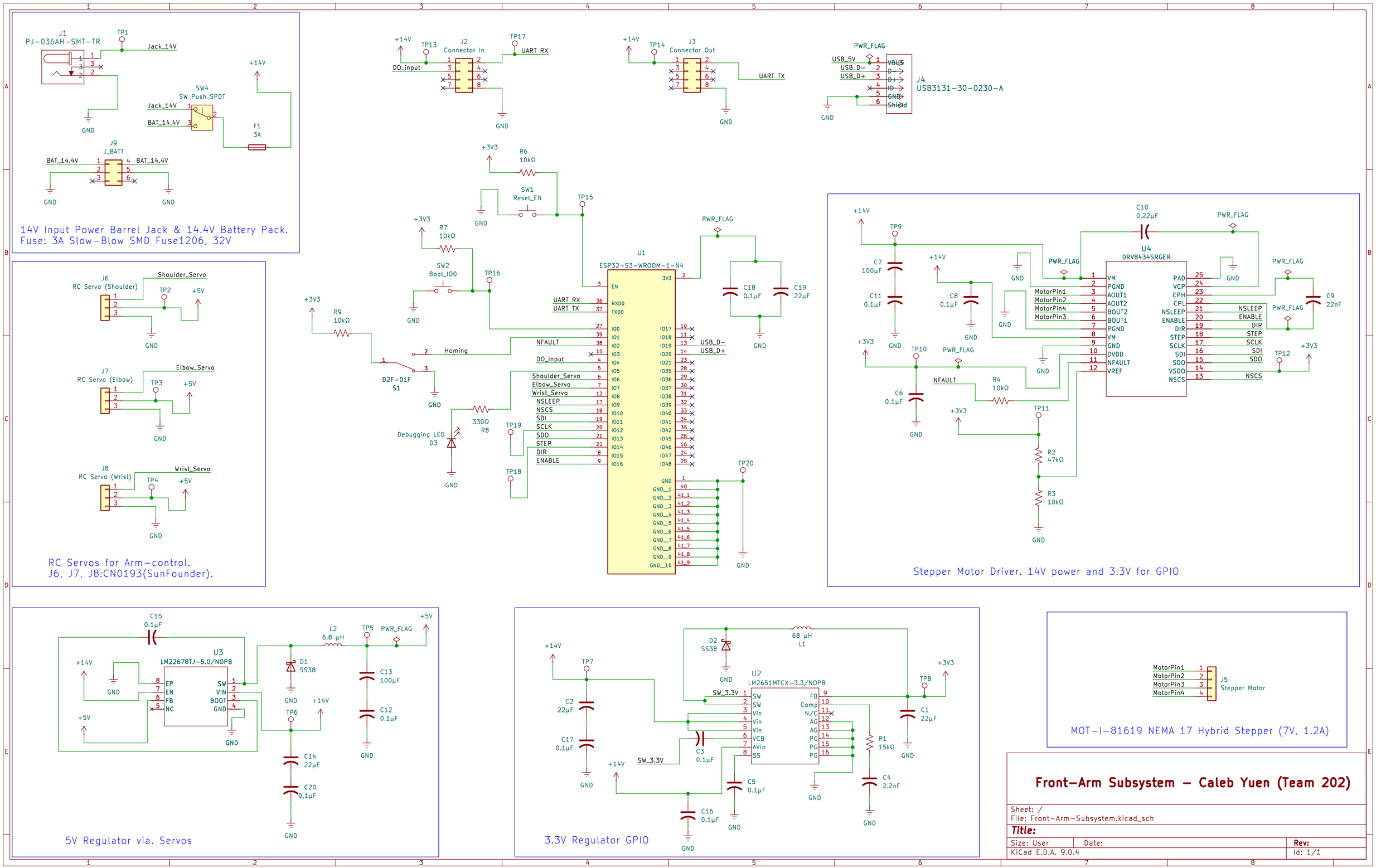
J1
PJ-036AH-SMT-TR
TP1
Jack_14V
+14V
SW4
SW_Push_SPDT
Jack_14V
BAT_14.4V
F1
3A
J9
J_BATT
BAT_14.4V
GND
14V Input Power Barrel Jack & 14.4V Battery Pack.
Fuse: 3A Slow-Blow SMD Fuse1206, 32V
J6
RC Servo (Shoulder)
Shoulder_Servo
TP2
+5V
J7
RC Servo (Elbow)
Elbow_Servo
TP3
J8
RC Servo (Wrist)
Wrist_Servo
TP4
RC Servos for Arm-control.
J6, J7, J8:CN0193(SunFounder).
+14V
TP13
J2
Connector In
TP17
UART RX
DO_input
+14V
TP14
J3
Connector Out
UART TX
PWR_FLAG
USB_5V
USB_D-
USB_D+
J4
USB3131-30-0230-A
+3V3
R6
10kΩ
SW1
Reset_EN
TP15
R7
10kΩ
SW2
Boot_IO0
TP16
R9
10kΩ
D2F-01F
S1
Homing
330Ω
R8
Debugging LED
D3
TP19
TP18
U1
ESP32-S3-WROOM-1-N4
UART RX
UART TX
NFAULT
DO_input
Shoulder_Servo
Elbow_Servo
Wrist_Servo
NSLEEP
NSCS
SDI
SCLK
SDO
STEP
DIR
ENABLE
USB_D-
USB_D+
C18
0.1µF
C19
22µF
TP20
+14V
TP9
C7
100µF
C11
0.1µF
C8
0.1µF
C10
0.22µF
U4
DRV8434SRGER
MotorPin1
MotorPin2
MotorPin4
MotorPin3
C9
22nF
TP10
C6
0.1µF
R4
10kΩ
TP11
R2
47kΩ
R3
10kΩ
TP12
Stepper Motor Driver. 14V power and 3.3V for GPIO
C15
0.1µF
U3
LM22678TJ-5.0/NOPB
L2
6.8 µH
TP5
D1
SS38
C13
100µF
C12
0.1µF
TP6
C14
22µF
C20
0.1µF
5V Regulator via. Servos
TP7
D2
SS38
68 µH
L1
U2
LM2651MTCX-3.3/NOPB
SW_3.3V
C2
22µF
C17
0.1µF
C3
0.1µF
C5
0.1µF
C16
0.1µF
TP8
C1
22µF
R1
15kΩ
C4
2.2nF
3.3V Regulator GPIO
MotorPin1
MotorPin2
MotorPin3
MotorPin4
J5
Stepper Motor
MOT-I-81619 NEMA 17 Hybrid Stepper (7V, 1.2A)
Front-Arm Subsystem - Caleb Yuen (Team 202)
Sheet: /
File: Front-Arm-Subsystem.kicad_sch
Title:
Size: User
Date:
Rev:
KiCad E.D.A. 9.0.4
Id: 1/1