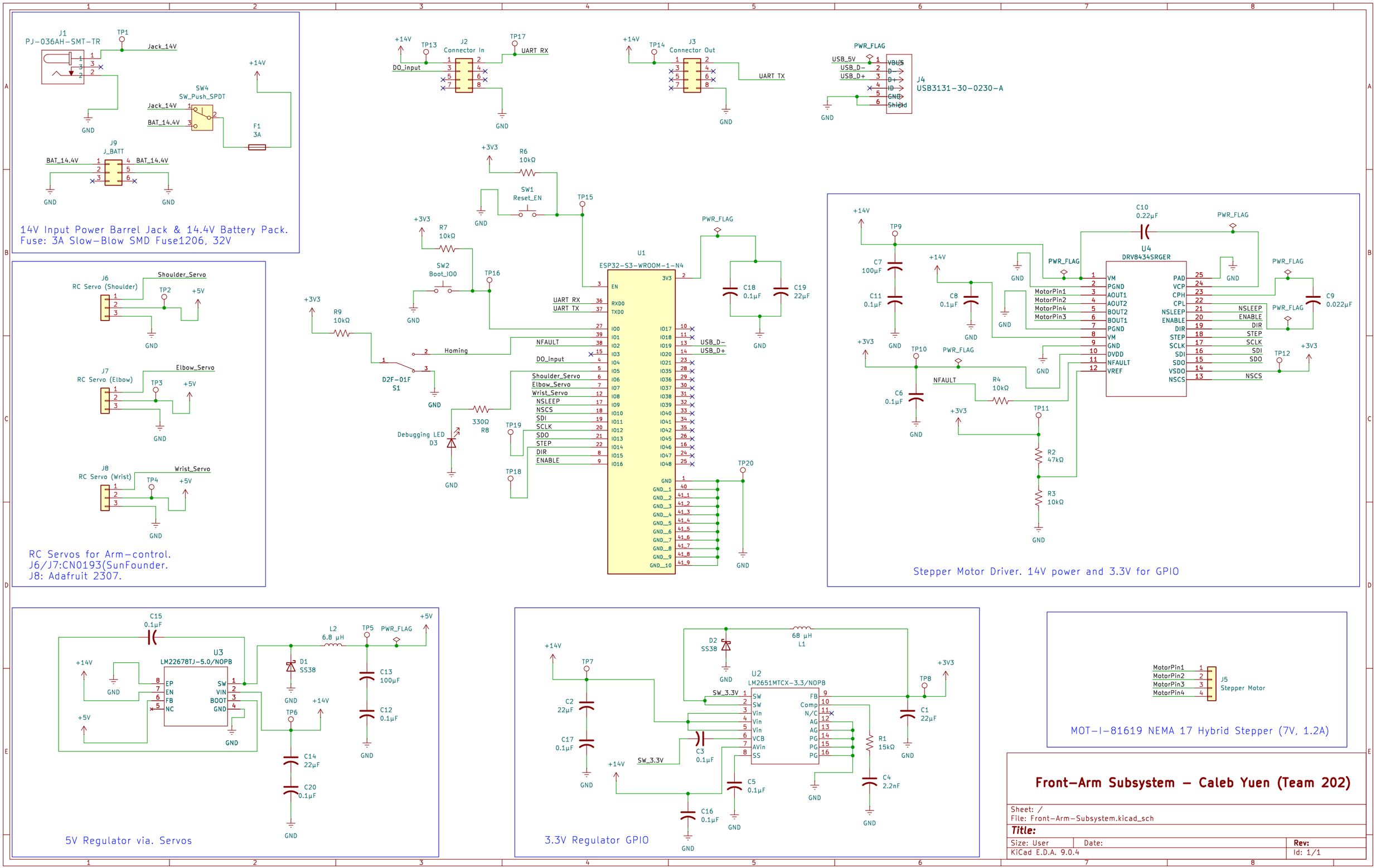
J1
PJ-036AH-SMT-TR
TP1
Jack_14V
+14V
SW4
SW_Push_SPDT
Jack_14V
BAT_14.4V
F1
3A
J9
J_BATT
BAT_14.4V
GND
14V Input Power Barrel Jack & 14.4V Battery Pack.
Fuse: 3A Slow-Blow SMD Fuse1206, 32V
J6
RC Servo (Shoulder)
Shoulder_Servo
TP2
+5V
J7
RC Servo (Elbow)
Elbow_Servo
TP3
J8
RC Servo (Wrist)
Wrist_Servo
TP4
RC Servos for Arm-control.
J6/J7:CN0193(SunFounder.
J8: Adafruit 2307.
+14V
TP13
J2
Connector In
TP17
UART RX
DO_input
J3
Connector Out
TP14
UART TX
PWR_FLAG
USB_5V
USB_D-
USB_D+
J4
USB3131-30-0230-A
VBUS
D-
D+
ID
GND
Shield
+3V3
R6
10kΩ
SW1
Reset_EN
TP15
R7
10kΩ
SW2
Boot_IO0
TP16
R9
10kΩ
D2F-01F
S1
Homing
Debugging LED
D3
330Ω
R8
TP19
TP18
U1
ESP32-S3-WROOM-1-N4
EN
RXD0
TXD0
UART RX
UART TX
NFAULT
DO_input
Shoulder_Servo
Elbow_Servo
Wrist_Servo
NSLEEP
NSCS
SDI
SCLK
SDO
STEP
DIR
ENABLE
3V3
USB_D-
USB_D+
TP20
C18
0.1µF
C19
22µF
C10
0.22µF
U4
DRV8434SRGER
C7
100µF
C11
0.1µF
C8
0.1µF
C6
0.1µF
TP9
TP10
TP11
TP12
R4
10kΩ
R2
47kΩ
R3
10kΩ
C9
0.022µF
MotorPin1
MotorPin2
MotorPin4
MotorPin3
VM
PGND
AOUT1
AOUT2
BOUT2
BOUT1
GND
DVDD
NFAULT
VREF
PAD
VCP
CPH
CPL
NSLEEP
ENABLE
DIR
STEP
SCLK
SDI
SDO
VSDO
NSCS
Stepper Motor Driver. 14V power and 3.3V for GPIO
C15
0.1µF
U3
LM22678TJ-5.0/NOPB
EP
EN
FB
NC
SW
VIN
BOOT
GND
L2
6.8 µH
TP5
D1
SS38
C13
100µF
C12
0.1µF
TP6
C14
22µF
C20
0.1µF
5V Regulator via. Servos
D2
SS38
68 µH
L1
U2
LM2651MTCX-3.3/NOPB
SW_3.3V
SW
Vin
VCB
AVin
SS
FB
Comp
N/C
AG
PG
TP7
TP8
C2
22µF
C17
0.1µF
C3
0.1µF
C5
0.1µF
C16
0.1µF
C1
22µF
R1
15kΩ
C4
2.2nF
3.3V Regulator GPIO
MotorPin1
MotorPin2
MotorPin3
MotorPin4
J5
Stepper Motor
MOT-I-81619 NEMA 17 Hybrid Stepper (7V, 1.2A)
Front-Arm Subsystem - Caleb Yuen (Team 202)
Sheet: /
File: Front-Arm-Subsystem.kicad_sch
Title:
Size: User
Date:
Rev:
KiCad E.D.A. 9.0.4
Id: 1/1