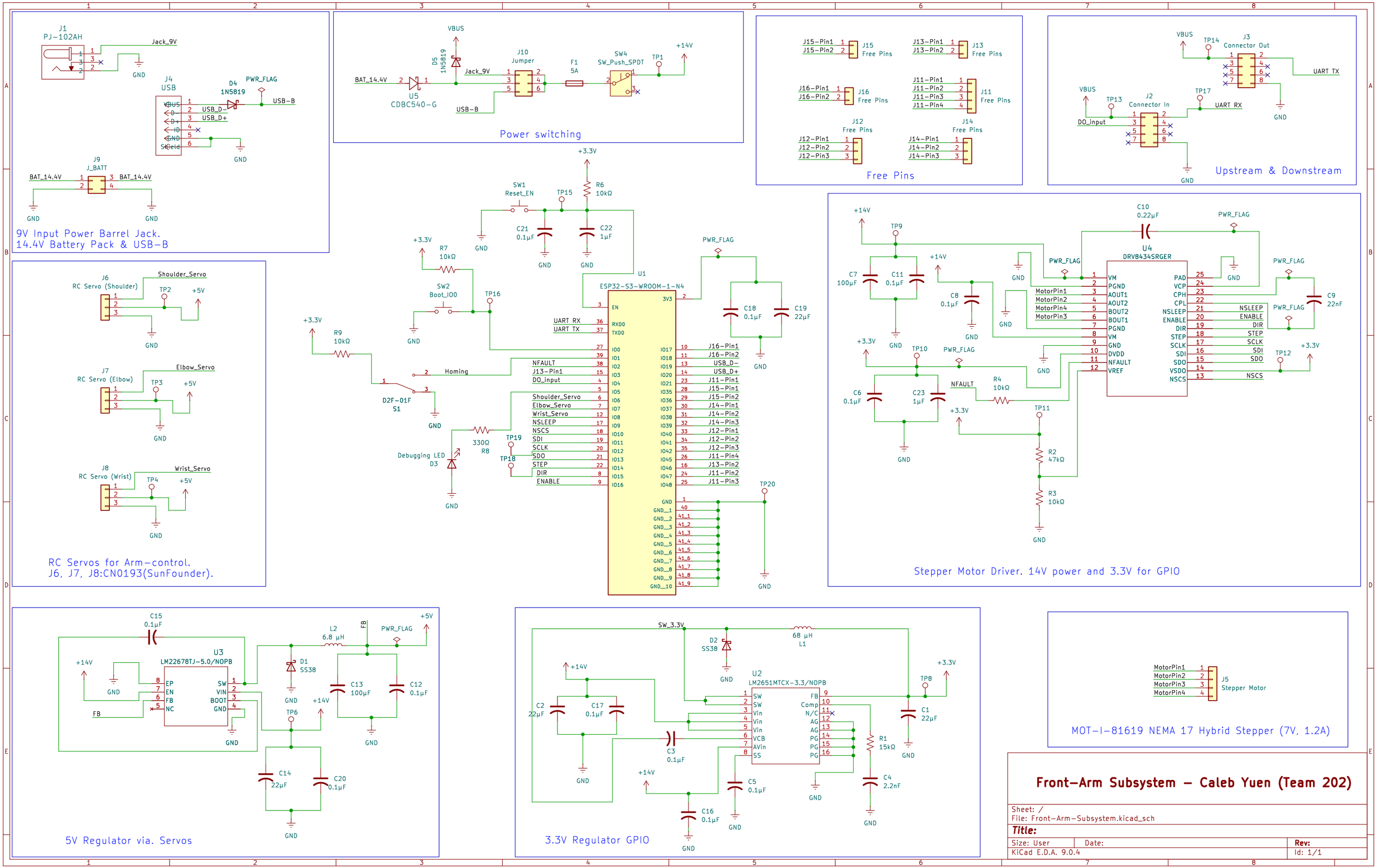
9V Input Power Barrel Jack.
14.4V Battery Pack & USB-B
J1
PJ-102AH
Jack_9V
GND
J4
USB
D4
1N5819
PWR_FLAG
USB-B
USB_D-
USB_D+
J9
J_BATT
BAT_14.4V
Power switching
VBUS
D5
1N5819
J10
Jumper
F1
5A
SW4
SW_Push_SPDT
TP1
+14V
U5
CDBC540-G
Free Pins
J15
J16
J13
J11
J12
J14
Upstream & Downstream
J3
Connector Out
J2
Connector In
UART TX
UART RX
DO_input
TP13
TP14
TP17
RC Servos for Arm-control.
J6, J7, J8:CN0193(SunFounder).
J6
RC Servo (Shoulder)
Shoulder_Servo
TP2
+5V
J7
RC Servo (Elbow)
Elbow_Servo
TP3
J8
RC Servo (Wrist)
Wrist_Servo
TP4
+3.3V
SW1
Reset_EN
TP15
R6
10kΩ
C21
0.1µF
C22
1µF
R7
10kΩ
SW2
Boot_IO0
TP16
R9
10kΩ
D2F-01F
S1
Homing
U1
ESP32-S3-WROOM-1-N4
UART RX
UART TX
NFAULT
J13-Pin1
DO_input
Shoulder_Servo
Elbow_Servo
Wrist_Servo
NSLEEP
NSCS
SDI
SCLK
SDO
STEP
DIR
ENABLE
330Ω
R8
Debugging LED
D3
TP19
TP18
TP20
C18
0.1µF
C19
22µF
U4
DRV8434SRGER
C10
0.22µF
C7
100µF
C11
0.1µF
C8
0.1µF
C9
22nF
C6
0.1µF
C23
1µF
R4
10kΩ
TP10
TP11
TP12
R2
47kΩ
R3
10kΩ
MotorPin1
MotorPin2
MotorPin4
MotorPin3
Stepper Motor Driver. 14V power and 3.3V for GPIO
C15
0.1µF
U3
LM22678TJ-5.0/NOPB
L2
6.8 µH
FB
D1
SS38
C13
100µF
C12
0.1µF
TP6
C14
22µF
C20
0.1µF
5V Regulator via. Servos
SW_3.3V
D2
SS38
68 µH
L1
U2
LM2651MTCX-3.3/NOPB
TP8
C2
22µF
C17
0.1µF
C3
0.1µF
C5
0.1µF
C16
0.1µF
C1
22µF
R1
15kΩ
C4
2.2nF
3.3V Regulator GPIO
MotorPin1
MotorPin2
MotorPin3
MotorPin4
J5
Stepper Motor
MOT-I-81619 NEMA 17 Hybrid Stepper (7V, 1.2A)
Front-Arm Subsystem - Caleb Yuen (Team 202)
Sheet: /
File: Front-Arm-Subsystem.kicad_sch
Title:
Size: User
Date:
Rev:
KiCad E.D.A. 9.0.4
Id: 1/1