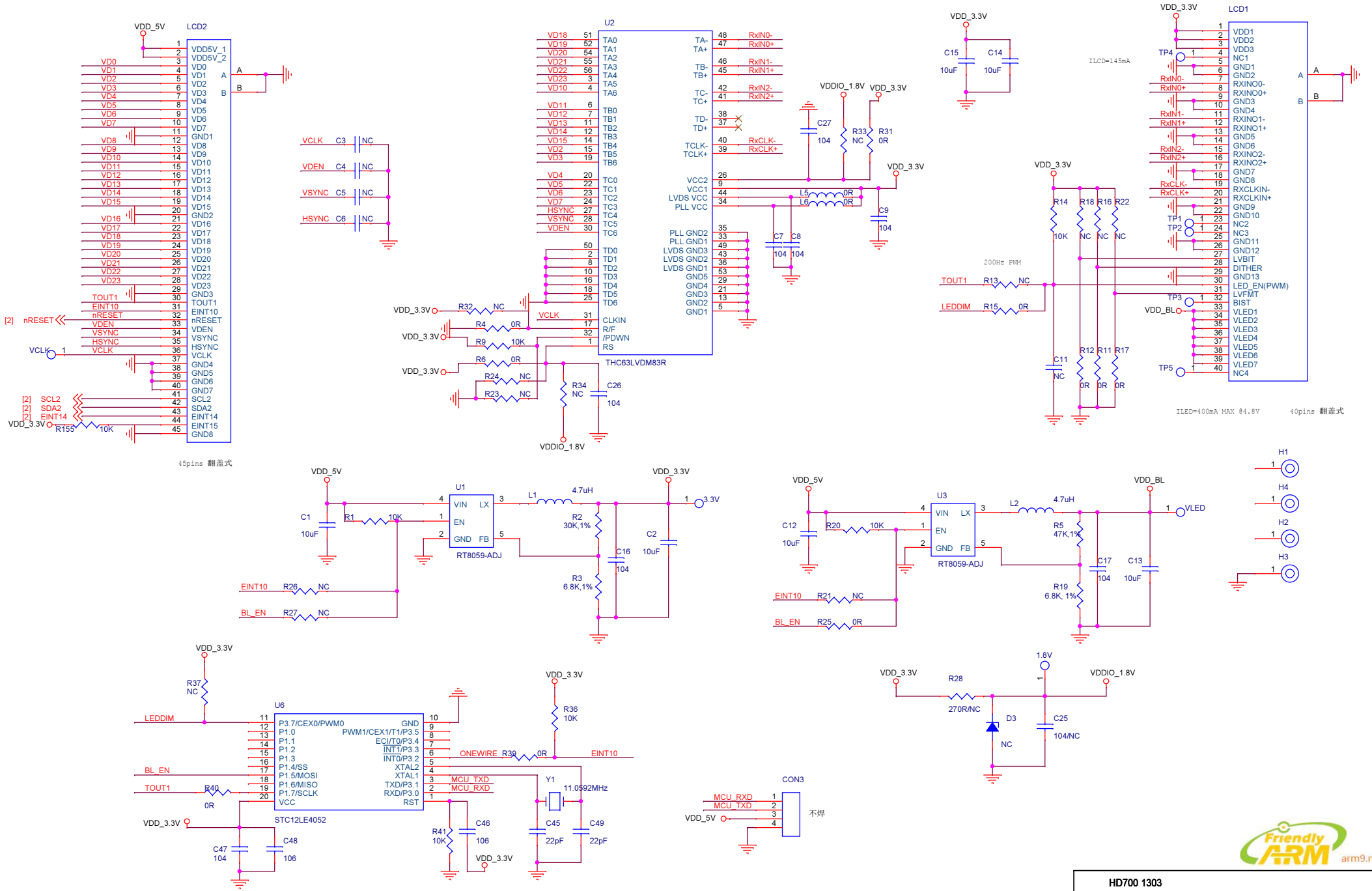
LCD2
VDD_5V
45pins 翻盖式
U2
THC63LVDM83R
LCD1
ILCD=145mA
200Hz PWM
ILED=400mA MAX @4.8V
40pins 翻盖式
U1
RT8059-ADJ
U3
RT8059-ADJ
U6
STC12LE4052
CON3
不焊
VDDIO_1.8V
VDD_3.3V
VDD_BL
VLED
3.3V
1.8V
Y1
11.0592MHz
H1
H4
H2
H3
HD700 1303
<Title2>
Size
A3
Document Number
<Doc>
Rev
<RevCode>
Date:
Thursday, June 27, 2013
Sheet
1
of
2
Friendly ARM
arm9.net

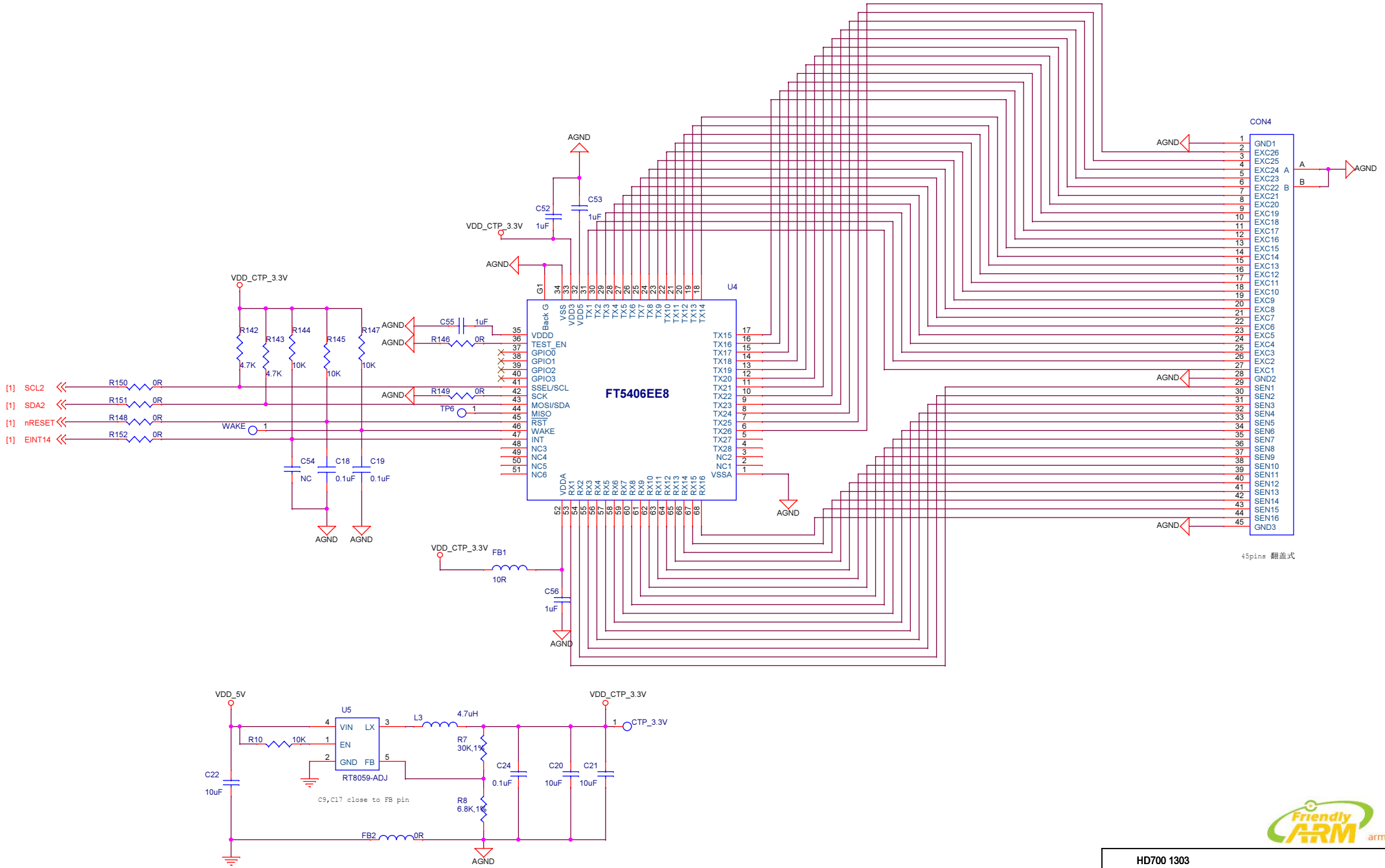
U4
FT5406EE8
CON4
45pins 翻盖式
VDD_CTP_3.3V
AGND
C52 1uF
C53 1uF
C55 1uF
R146 0R
R149 0R
R147 10K
R145 10K
R144 10K
R143 4.7K
R142 4.7K
R150 0R
R151 0R
R148 0R
R152 0R
[1] SCL2
[1] SDA2
[1] nRESET
[1] EINT14
WAKE
TP6
C54 NC
C18 0.1uF
C19 0.1uF
FB1 10R
C56 1uF
U5
RT8059-ADJ
VIN
LX
EN
GND
FB
VDD_5V
R10 10K
L3 4.7uH
R7 30K,1%
R8 6.8K,1%
C22 10uF
C24 0.1uF
C20 10uF
C21 10uF
CTP_3.3V
FB2 0R
C9,C17 close to FB pin
HD700 1303
<Title2>
Size A3
Document Number
<Doc>
Rev
<RevCode>
Date: Thursday, June 27, 2013
Sheet 2 of 2