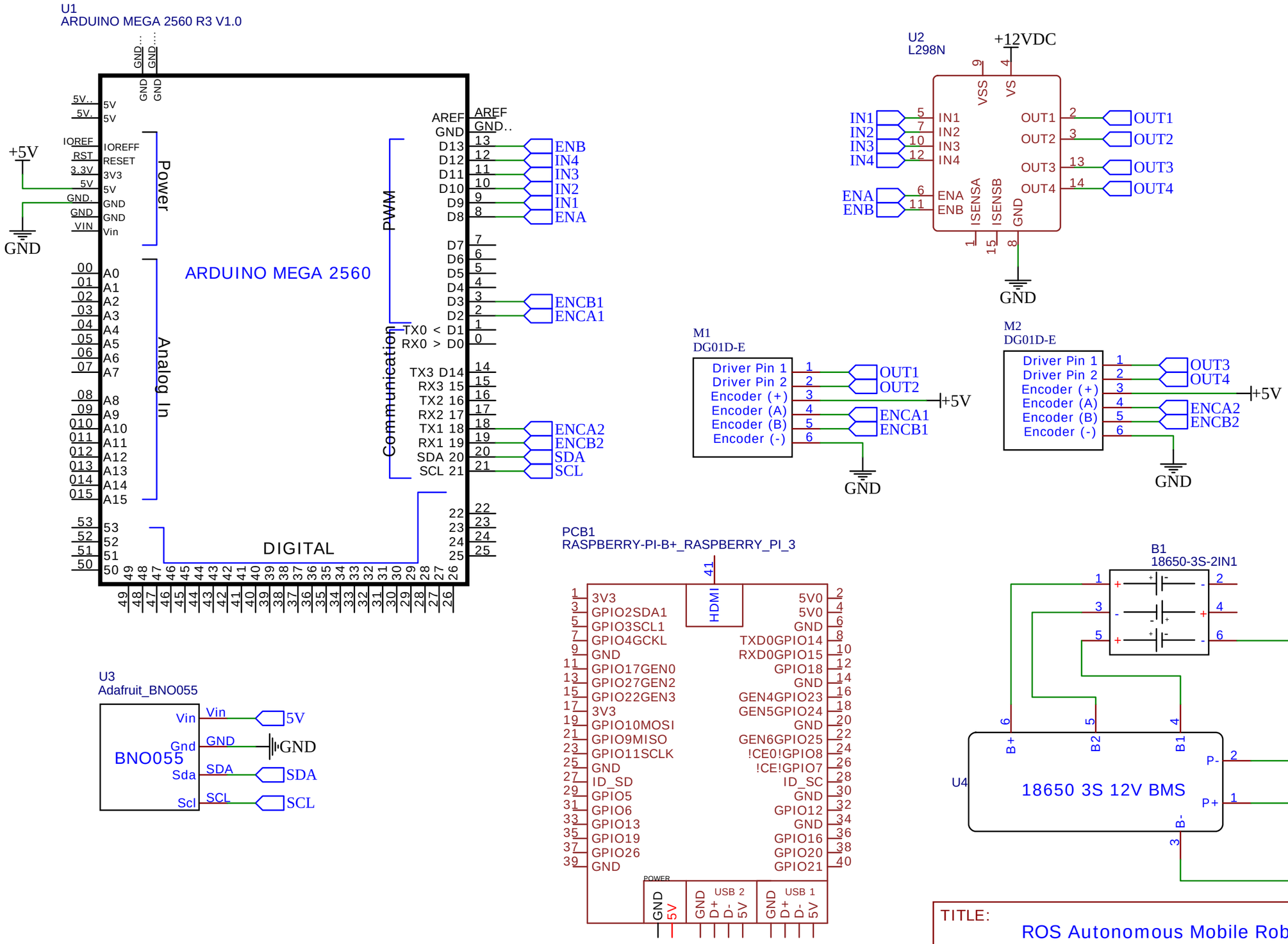

TITLE: ROS Autonomous Mobile Robot

REV: 2.1

Company: github.com/czagrzebski

Sheet: 1/1

Date: 2023-08-22

Drawn By: Creed Zagrzebski