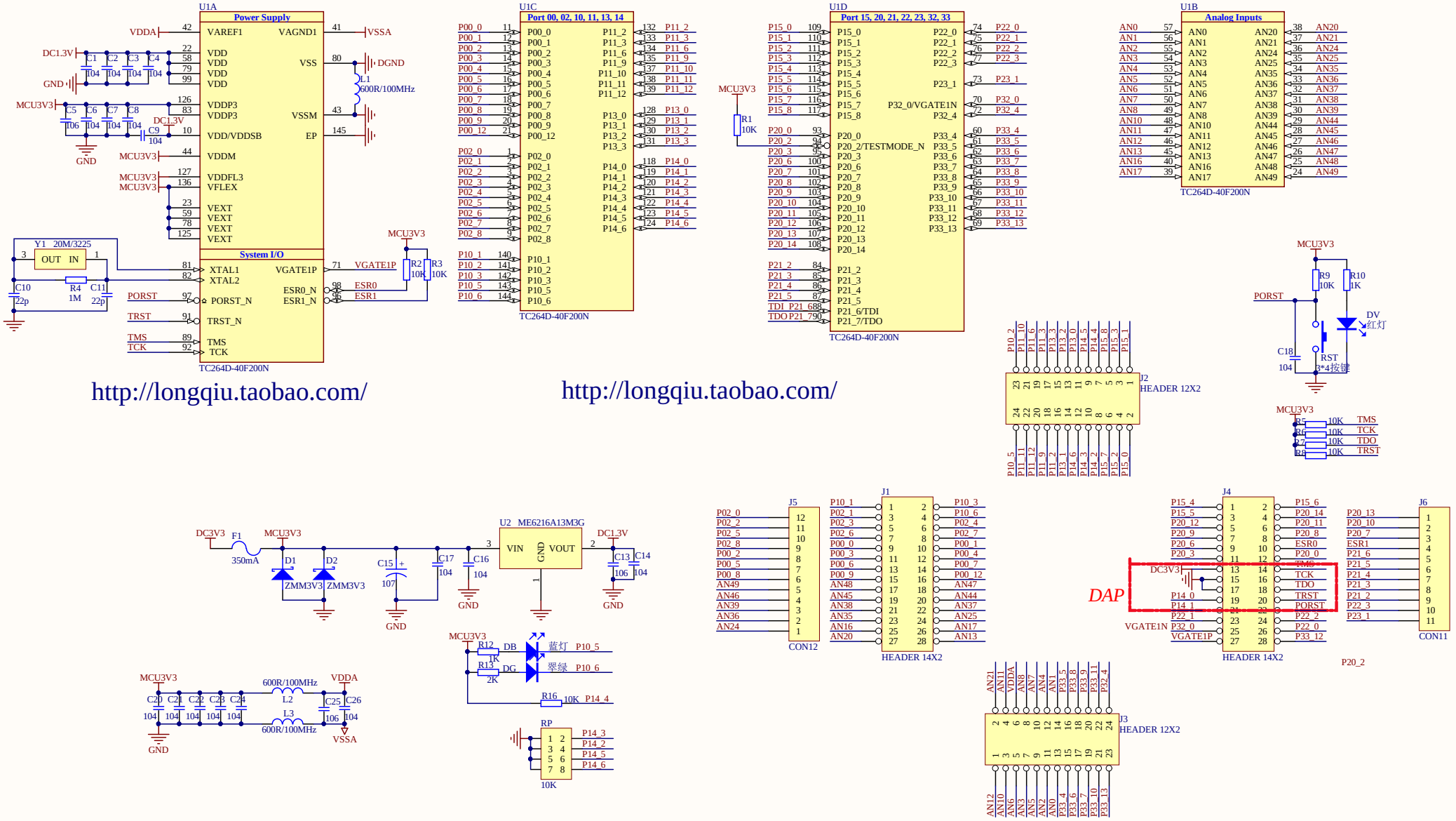

http://longqiu.taobao.com/

http://longqiu.taobao.com/

北京龙邱智能科技有限公司TC264核心板原理图

LONGQIU LOGO

Title		
Size B	Number	Revision
Date: 2020/3/22	Sheet of	
File: F:\PcbPrj\..\LQ-TC264-SYSVC.SchDoc	Drawn By:	

http://longqiu.taobao.com/