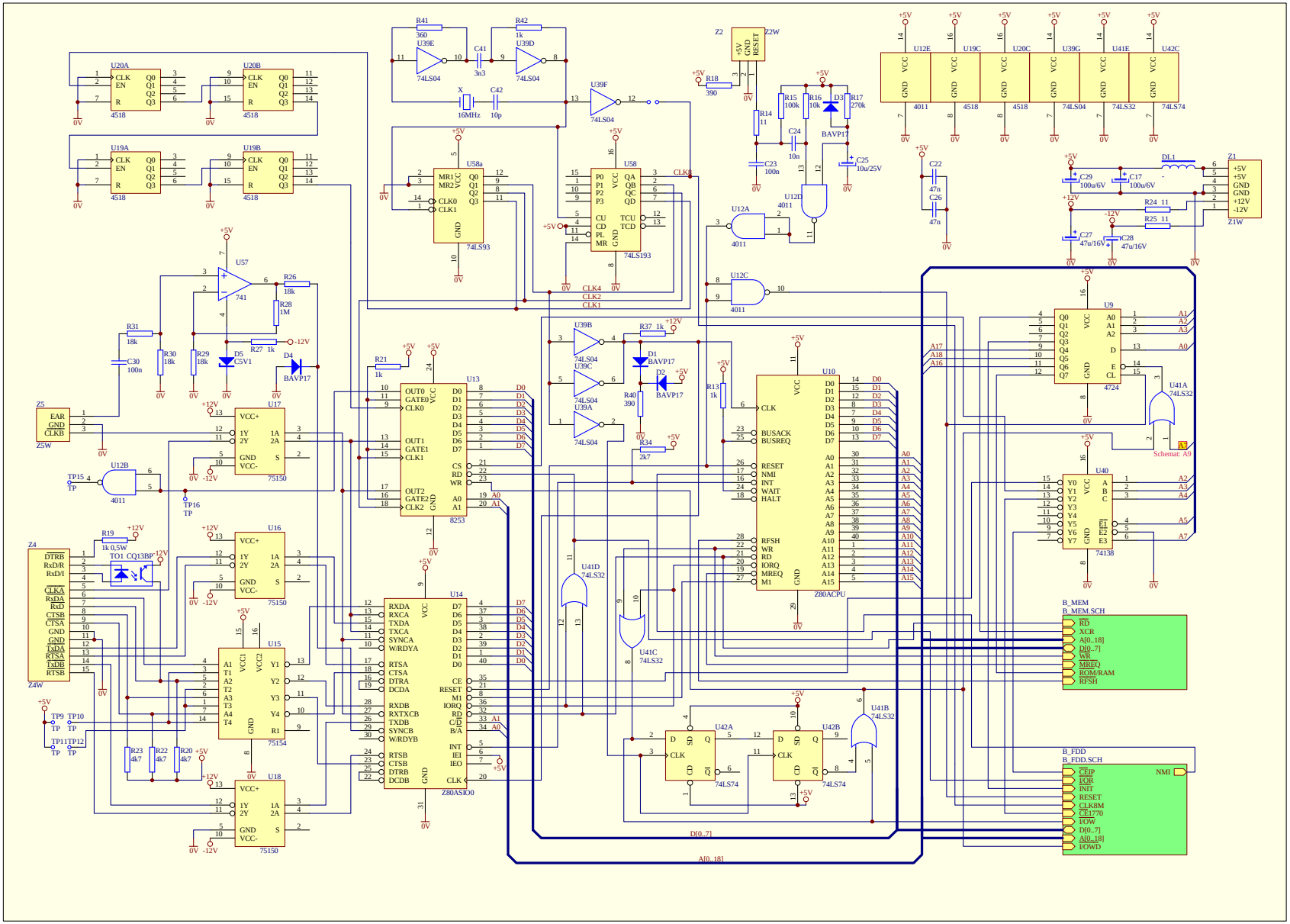
U20A
U20B
U19A
U19B
4518
R41
360
U39E
74LS04
C41
3n3
R42
1k
U39D
X
16MHz
C42
10p
U39F
U58a
MR1
MR2
CLK0
CLK1
74LS93
U58
74LS193
CLK4
CLK2
CLK1
Z2
Z2W
RESET
R18
390
R14
11
R15
100k
R16
10k
D3
R17
270k
BAVP17
C24
10n
C23
100n
C25
10u/25V
U12D
4011
U12A
U12C
U12E
U19C
U20C
U39G
U41E
U42C
4011
4518
74LS04
74LS32
74LS74
C22
47n
C26
47n
C29
100u/6V
C17
100u/6V
DL1
Z1
Z1W
R24 11
R25 11
C27
47u/16V
C28
47u/16V
U57
741
R26
18k
R28
1M
R31
18k
R30
18k
R29
18k
R27 1k
D5
C5V1
D4
BAVP17
C30
100n
Z5
EAR
GND
CLKB
Z5W
U17
75150
U12B
4011
TP15
TP16
U16
75150
R19
1k 0,5W
TO1 CQ13BP
Z4
DTRB
RxD/R
RxD/I
CLKA
RxDA
RxD
CTSB
CTSA
GND
GND
TxDA
RTSA
TxDB
RTSB
Z4W
U15
75154
TP9
TP10
TP11
TP12
R23
4k7
R22
4k7
R20
4k7
U18
75150
R21
1k
U13
8253
OUT0
GATE0
CLK0
OUT1
GATE1
CLK1
OUT2
GATE2
CLK2
CS
RD
WR
A0
A1
U14
Z80ASIO0
RXDA
RXCA
TXDA
SYNCA
W/RDYA
RTSA
CTSA
DTRA
DCDA
RXDB
RXTXCB
TXDB
SYNCB
W/RDYB
RTSB
CTSB
DTRB
DCDB
CE
RESET
M1
IORQ
RD
C/D
B/A
INT
IEI
IEO
CLK
U39B
U39C
U39A
74LS04
R37 1k
D1
BAVP17
D2
BAVP17
R40
390
R34
2k7
R13
1k
U10
Z80ACPU
CLK
BUSACK
BUSREQ
RESET
NMI
INT
WAIT
HALT
RFSH
WR
RD
IORQ
MREQ
M1
U41D
74LS32
U41C
74LS32
U41B
74LS32
U42A
U42B
74LS74
U9
4724
U41A
74LS32
Schemat: A9
U40
74138
B_MEM
B_MEM.SCH
RD
XCR
A[0..18]
D[0..7]
WR
MREQ
ROM/RAM
RFSH
B_FDD
B_FDD.SCH
CEIP
IOR
INIT
RESET
CLK8M
CE1770
IOW
D[0..7]
A[0..18]
IOWD
NMI
D[0..7]
A[0..18]

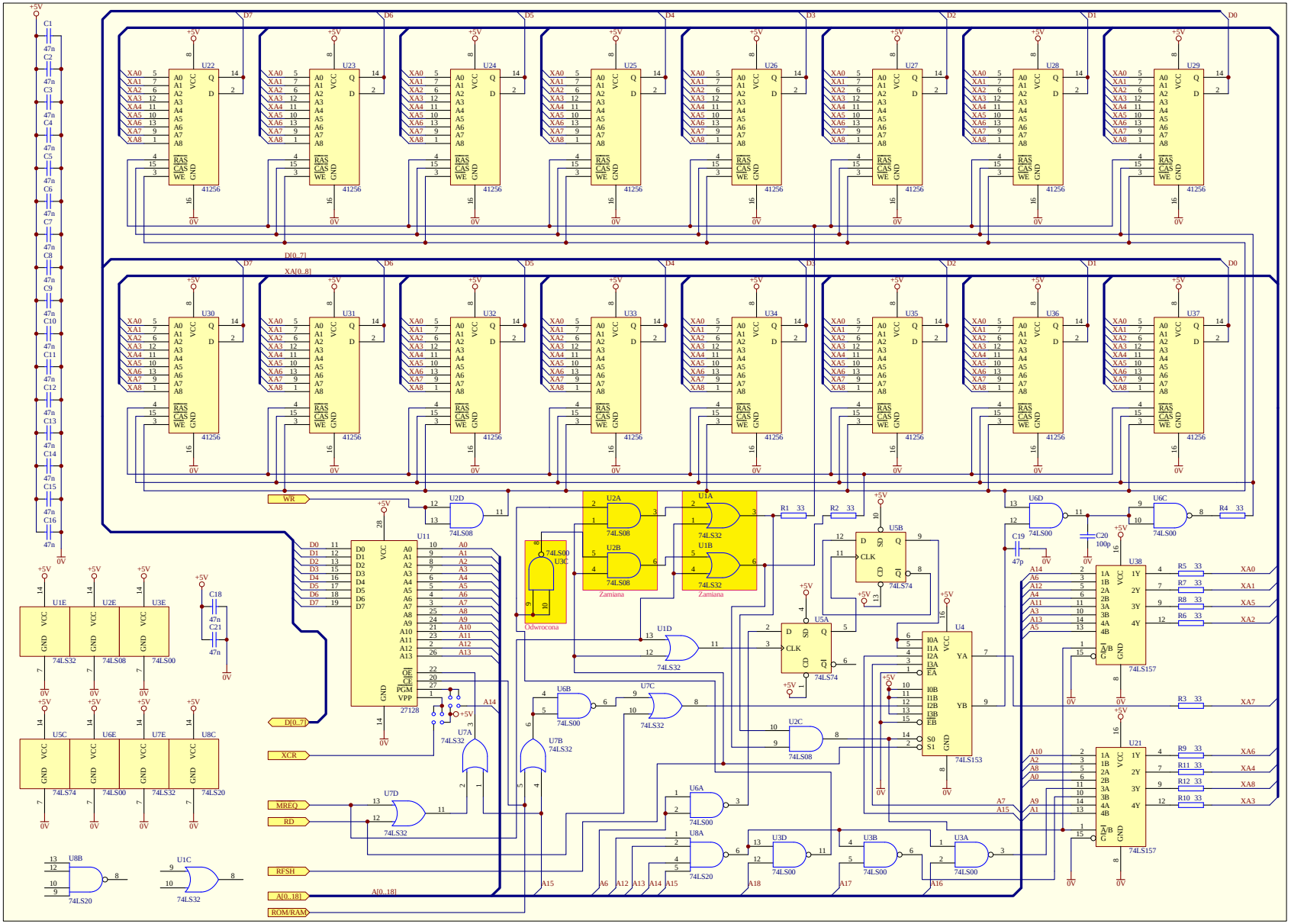
U22
U23
U24
U25
U26
U27
U28
U29
U30
U31
U32
U33
U34
U35
U36
U37
41256
D[0..7]
XA[0..8]
WR
U2D
74LS08
U11
27128
U2A
U2B
74LS08
Zamiana
U1A
U1B
74LS32
Zamiana
74LS00
U3C
Odwrocona
U1D
74LS32
U5B
74LS74
U5A
74LS74
U4
74LS153
U6D
U6C
74LS00
U38
U21
74LS157
XA0
XA1
XA5
XA2
XA7
XA6
XA4
XA3
XCR
MREQ
RD
RFSH
A[0..18]
ROM/RAM
U1E
U2E
U3E
74LS32
74LS08
74LS00
U5C
U6E
U7E
U8C
74LS74
74LS00
74LS32
74LS20
U8B
74LS20
U1C
74LS32
U7A
74LS32
U7B
74LS32
U7C
74LS32
U7D
74LS32
U6B
74LS00
U6A
74LS00
U8A
74LS20
U3D
74LS00
U3B
74LS00
U3A
74LS00
U2C
74LS08

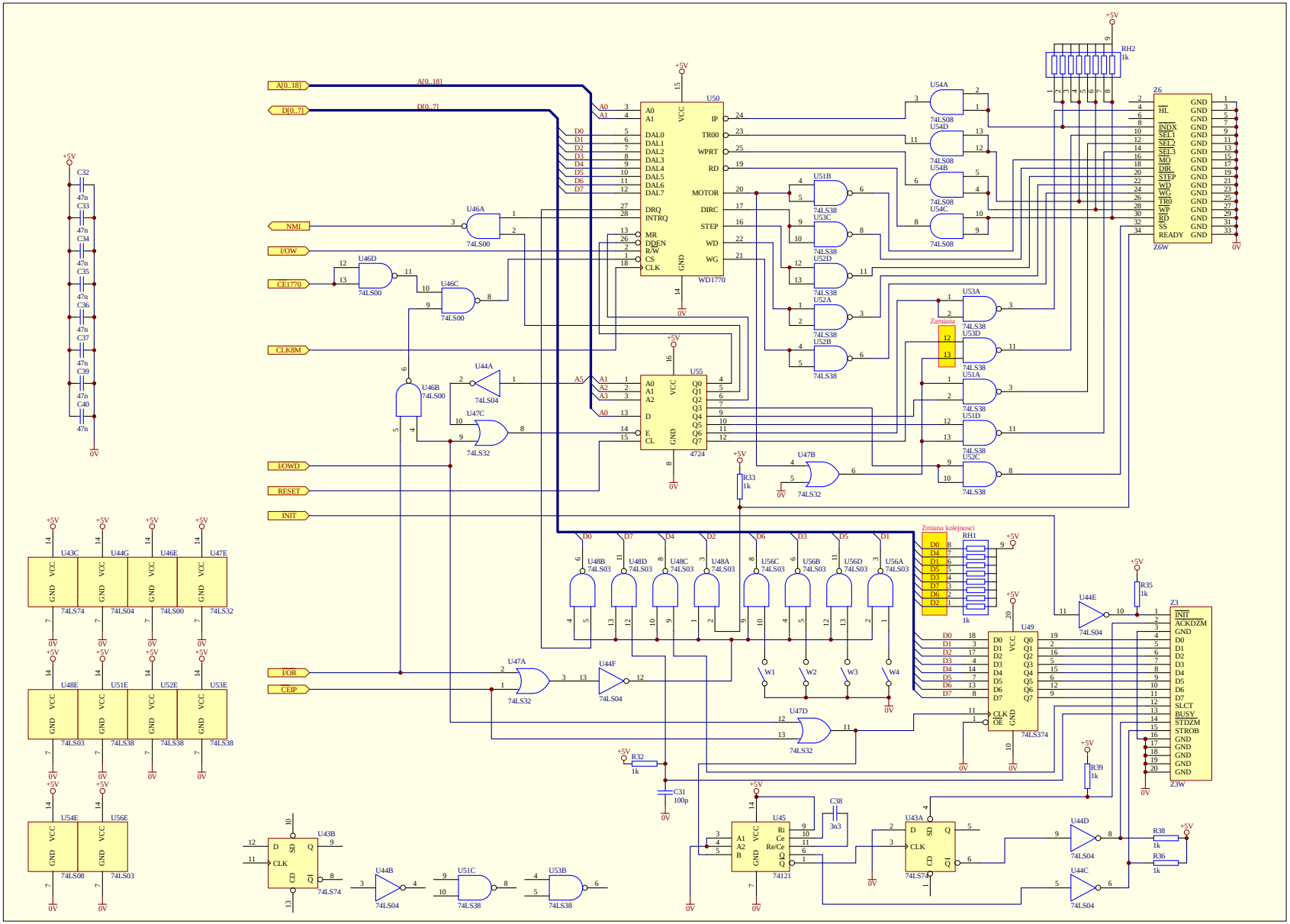
A[0..18]
D[0..7]
NMI
I/OW
CE1770
CLK8M
I/OWD
RESET
INIT
I/OR
CEIP
U50
WD1770
U55
4724
U49
74LS374
Z6
Z6W
Z3
Z3W
RH1
RH2
Zmiana kolejnosci
Zamiana
W1
W2
W3
W4
R32
R33
R35
R36
R38
R39
C31
C38
C32
C33
C34
C35
C36
C37
C39
C40
U45
74121
U43A
U43B
U44A
U44B
U44C
U44D
U44E
U44F
U46A
U46B
U46C
U46D
U47A
U47B
U47C
U47D
U48B
U48C
U48D
U48E
U51A
U51B
U51C
U51D
U51E
U52A
U52B
U52C
U52D
U52E
U53A
U53B
U53C
U53D
U53E
U54A
U54B
U54C
U54D
U54E
U56A
U56B
U56C
U56D
U56E
U43C
U44G
U46E
U47E
+5V
0V