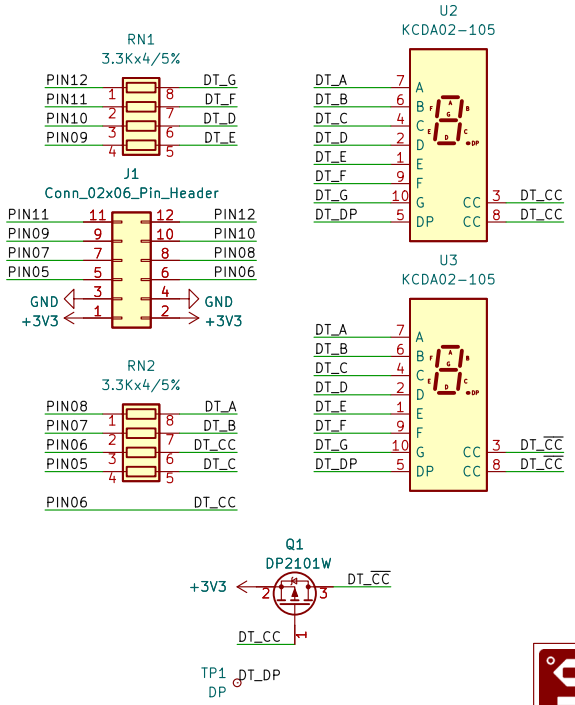

Sheet: /
File: PMOD_DT.kicad_sch

Title:

Size: A5	Date: 2023-11-11	**Rev:**
KiCad E.D.A. kicad (6.0.11)		Id: 1/1