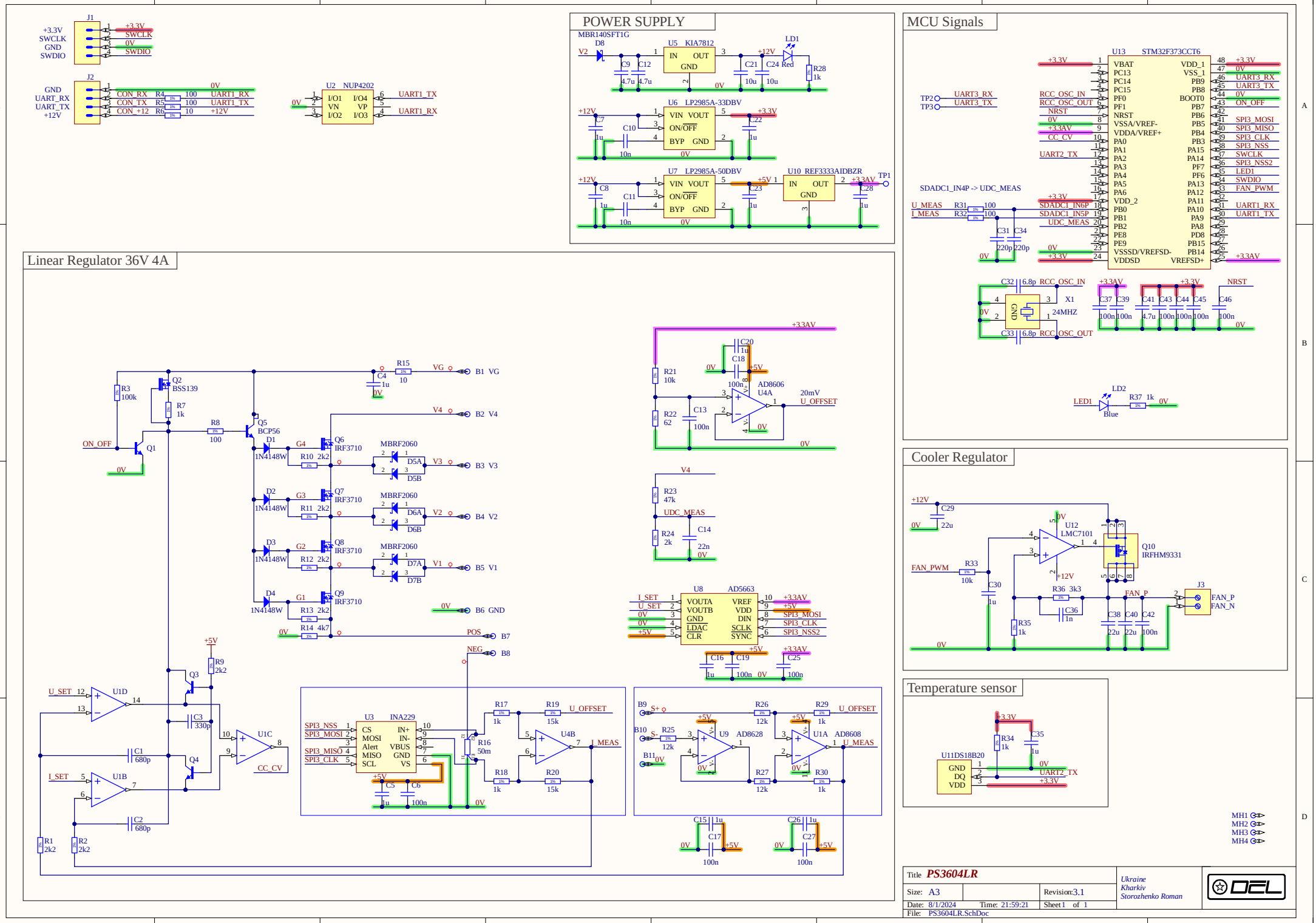
POWER SUPPLY
MCU Signals
Linear Regulator 36V 4A
Cooler Regulator
Temperature sensor
U13 STM32F373CCT6
U5 KIA7812
U6 LP2985A-33DBV
U7 LP2985A-50DBV
U10 REF3333AIDBZR
U2 NUP4202
U3 INA229
U8 AD5663
U9 AD8628
U1A AD8608
U4A AD8606
U12 LMC7101
Q10 IRFHM9331
U11DS18B20
Title PS3604LR
Size: A3
Revision: 3.1
Date: 8/1/2024
Time: 21:59:21
Sheet 1 of 1
File: PS3604LR.SchDoc
Ukraine
Kharkiv
Storozhenko Roman

Designator	Comment	Footprint	Part Number	Part Description	Quantity
B1, B2, B3, B4, B5, B6	VG, V4, V3, V2, V1, GND	c250h130	PLATED_HOLE1.3_PAD2.5	Plated Through Hole: Hole Dia.=1.3mm Pad Dia.=2.5mm	6
B7, B8	POS, NEG	c375h250	PLATED_HOLE2.5_PAD3.75	Plated Through Hole: Hole Dia.=2.5mm Pad Dia.=3.75mm	2
B9, B10, B11	Plated Hole	c150h100	PLATED_HOLE1.0_PAD1.5	Plated Through Hole: Hole Dia.=1.0mm Pad Dia.=1.5mm	3
C1, C2	680p	CAPC2012X135N	CC0805_680PF_50V_5%_NP0	SMD Multilayer Chip Ceramic Capacitor	2
C3	330p	CAPC2012X135N	CC0805_330PF_50V_5%_NP0	SMD Multilayer Chip Ceramic Capacitor	1
C4	1u	CAPC3216X140N	CC1206_1UF_100V_10%_X7R	SMD Multilayer Chip Ceramic Capacitor	1
C5, C7, C8, C15, C16, C20, C22, C23, C26, C28, C30, C35	1u	CAPC1005X55N	CC0402_1UF_10V_20%_X5R	SMD Multilayer Chip Ceramic Capacitor	12
C6, C13, C17, C18, C19, C25, C27, C37, C39, C42, C43, C44, C45, C46	100n	CAPC1005X55N	CC0402_100NF_50V_10%_X7R	SMD Multilayer Chip Ceramic Capacitor	14
C9, C12	4.7u	CAPC3216X140N	CC1206_4.7UF_50V_10%_X7R	SMD Multilayer Chip Ceramic Capacitor	2
C10, C11	10n	CAPC1005X55N	CC0402_10NF_50V_10%_X7R	SMD Multilayer Chip Ceramic Capacitor	2
C14	22n	CAPC1005X55N	CC0402_22NF_16V_10%_X7R	SMD Multilayer Chip Ceramic Capacitor	1
C21, C24	10u	CAPC3216X140N	CC1206_10UF_16V_10%_X7R	SMD Multilayer Chip Ceramic Capacitor	2
C29, C38, C40	22u	CAPC3216X100N	CC1206_22UF_16V_20%_X5R	SMD Multilayer Chip Ceramic Capacitor	3
C31, C34	220p	CAPC1005X55N	CC0402_220PF_50V_5%_NP0	SMD Multilayer Chip Ceramic Capacitor	2
C32, C33	6.8p	CAPC1005X55N	CC0402_6.8PF_50V_0.5PF_NP0	SMD Multilayer Chip Ceramic Capacitor	2
C36	1n	CAPC1005X55N	CC0402_1NF_50V_5%_NP0	SMD Multilayer Chip Ceramic Capacitor	1
C41	4.7u	CAPC1608X87N	CC0603_4.7UF_10V_10%_X5R	SMD Multilayer Chip Ceramic Capacitor	1
D1, D2, D3, D4	1N4148W	SOD3715X145N	1N4148W	Small Signal Diode	4
D5, D6, D7	MBRF2060	TO-220-H-OUTSIDE	MBRF2060CTG_h_outside	Switch-mode Schottky Power Rectifier (Common Cathode)	3
D8	MBR1405FT1G	SOD-123FL	MBR1405FT1G	Schottky Power Rectifier	1
J1	Header 4	3M_929550-0104-EU	3M_929550-0104-EU	10 Contacts - Horizontal Contacts Straight Strip Header Pitch 2.54	1
J2	SPOX	MOLEX_22-03-5045	MOLEX_22-03-5045	2.50mm Pitch SPOX Wire-to-Board Header, Vertical, Shrouded, 4 Circuits, Tin (Sn) Plating	1
J3		PHOENIX_1725656	PHOENIX_1725656	6A, 63V, Terminal Block, Pitch 2.54mm, 2 Positions, Screw Connection	1
LD1	Red	LEDC1608X80N_RED	LED_OF-SMD1608R	Surface Mount Red LED (0603 Case)	1
LD2	Blue	LEDC1608X80N_BLUE	LED_OF-SMD1608B	Surface Mount Red LED (0603 Case)	1
MH1, MH2, MH3, MH4	Non Plated Hole	MTG600H320V8P	NON-PLATED_HOLE3.2_PAD6.0_8p	Through Hole: Hole Dia.=3.2mm Pad Dia.=6mm + 6 Via Dia.=0.3mm	4
Q1, Q3, Q4	MMBT5551	SOT95P240X130-3N	MMBT5551L	160V 600A NPN General Purpose Amplifier	3
Q2	BSS139	SOT95P240X110-3N	BSS139	250V 0.1A N-Channel MOSFET Depletion-mode	1
Q5	BCP56	SOT230P700X180-4N	BCP56	80V 1A NPN Medium Power Transistor	1
Q6, Q7, Q8, Q9	IRF3710	TO-220-H-OUTSIDE	IRF3710_h_outside	100V 57A 0.023 Ohm N-Channel Power MOSFET	4
Q10	IRFHM9331	PQFN50P300X300X100_HS-9N	IRFHM9331TRPbF	-30V 11A 0.014 Ohm P-Channel MOSFET	1
R1, R2, R9	2k2	RESC1005X40N	R0402_2K2_1%_0.0625W_100PPM	General Purpose Thick Film Chip Resistor	3
R3	100k	RESC2012X60N	R0805_100K_1%_0.125W_100PPM	General Purpose Thick Film Chip Resistor	1
R4, R5, R8, R31, R32	100	RESC1005X40N	R0402_100R_1%_0.0625W_100PPM	General Purpose Thick Film Chip Resistor	5
R6	10	RESC1608X55N	R0603_10R_1%_0.1W_200PPM	General Purpose Thick Film Chip Resistor	1
R7, R17, R18, R28, R29, R30, R34, R35, R37	1k	RESC1005X40N	R0402_1K_1%_0.0625W_100PPM	General Purpose Thick Film Chip Resistor	9
R10, R11, R12, R13	2k2	RESC2012X60N	R0805_2K2_1%_0.125W_100PPM	General Purpose Thick Film Chip Resistor	4
R14	4k7	RESC3216X65N	R1206_4K7_1%_0.25W_100PPM	General Purpose Thick Film Chip Resistor	1
R15	10	RESC1005X40N	R0402_10R_1%_0.0625W_200PPM	General Purpose Thick Film Chip Resistor	1
R16	50m	FC4L64_OHM	FC4L64R050FER	FC4L Four Terminal Current Sense resistor	1
R19, R20	15k	RESC1005X40N	R0402_15K_1%_0.0625W_100PPM	General Purpose Thick Film Chip Resistor	2
R21, R33	10k	RESC1005X40N	R0402_10K_1%_0.0625W_100PPM	General Purpose Thick Film Chip Resistor	2
R22	62	RESC1005X40N	R0402_62R_1%_0.0625W_100PPM	General Purpose Thick Film Chip Resistor	1
R23	47k	RESC1608X55N	R0603_47K_1%_0.1W_100PPM	General Purpose Thick Film Chip Resistor	1
R24	2k	RESC1005X40N	R0402_2K_1%_0.0625W_100PPM	General Purpose Thick Film Chip Resistor	1
R25, R26, R27	12k	RESC1005X40N	R0402_12K_1%_0.0625W_100PPM	General Purpose Thick Film Chip Resistor	3
R36	3k3	RESC1005X40N	R0402_3K3_1%_0.0625W_100PPM	General Purpose Thick Film Chip Resistor	1
TP1, TP2, TP3	Test Point	TP_SMD_800	TP_SMD_0.8MM	0.8mm round SMD Pad	3
U1	AD8608	SOP65P640X110-14N	AD8608ARUZ-REEL	Precision, Low Noise, CMOS, Rail-to-Rail, Input/Output Operational Amplifiers	1
U2	NUP4202	SOT65P220X110-6N	NUP4202W1	ESD Protection Diode, Low Clamping Voltage	1
U3	INA229	SOP50P490X110-10N	INA229AIDGS	85-V, 20-Bit, Ultra-Precise Power/Energy/Charge Monitor With SPI Interface	1
U4	AD8606	SOP65P490X110-8BN	AD8606ARMZ-REEL	Precision, Low Noise, CMOS, Rail-to-Rail, Input/Output Operational Amplifiers	1
U5	KIA7812	TO-220-H-OUTSIDE	KIA7812API_h_outside	3-Terminal 12V 1A Positive Voltage Regulator	1
U6	LP2985A-33DBV	SOT95P280X145-5N	LP2985A-33DBV	3.3V, 150mA Low-Noise Low-Dropout Regulator Whit Shutdown	1
U7	LP2985A-50DBV	SOT95P280X145-5N	LP2985A-50DBV	5V, 150mA Low-Noise Low-Dropout Regulator Whit Shutdown	1
U8	AD5663	SOP50P490X110-10N	AD5663BRMZ	2.7 V to 5.5 V, 250 µA, Rail-to-Rail Output, Data Sheet Dual 16-Bit nanoDAC	1
U9	AD8628	SOT95P280X145-5N	AD8628ARTZ	Zero-Drift, Single-Supply, Rail-to-Rail Input/Output Operational Amplifier	1
U10	REF3333AIDBZR	SOT95P237X112-3N	REF3333AIDBZR	3.3V, 30ppm/C Drift, 3.9uA, Voltage Reference	1
U11	DS18B20	TO-92-H-OUTSIDE	DS18B20_h_outside	Programmable Resolution 1-Wire Digital Thermometer 1-Wire Digital Thermometer	1
U12	LMC7101	SOT95P280X145-5N	LMC7101AIM5X/NOPB	2.7-15V, Rail-to-Rail I/O Amplifier	1
U13	STM32F373CCT6	QFP50P900X900X160-48N	STM32F373CCT6	ARM®Cortex®-M4 32b MCU+FPU, up to 256KB Flash+32KB SRAM, timers, 4 ADCs (16-bit Sig. Delta / 12-bit SAR), 3 DACs, 2 comp., 2.0-3.6 V	1
X1	24MHZ	OSCCC160X200X65-4N	24MHZ_XRCGB24M000F3M00R0	± 30ppm at (25±3°C), -30°C to +85°C, 6pF, Ceramic SMD Crystal, Type HCR2016	1

View from Top side (Scale 2:1)

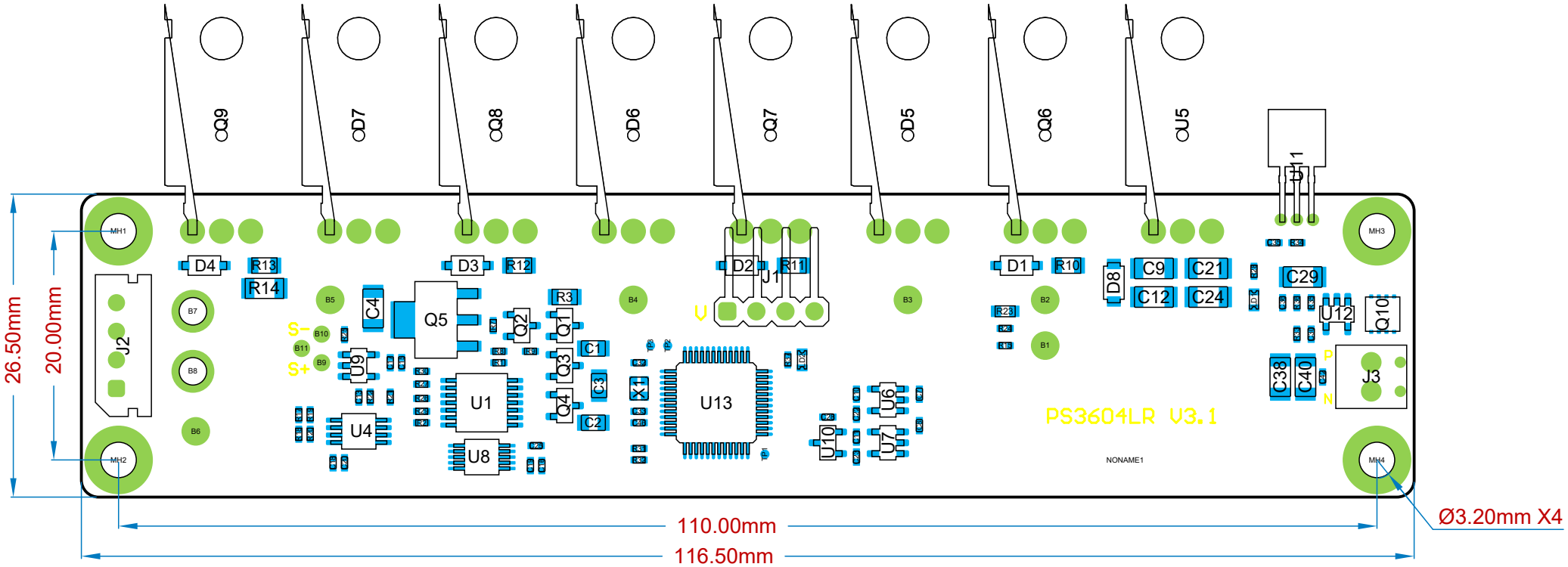

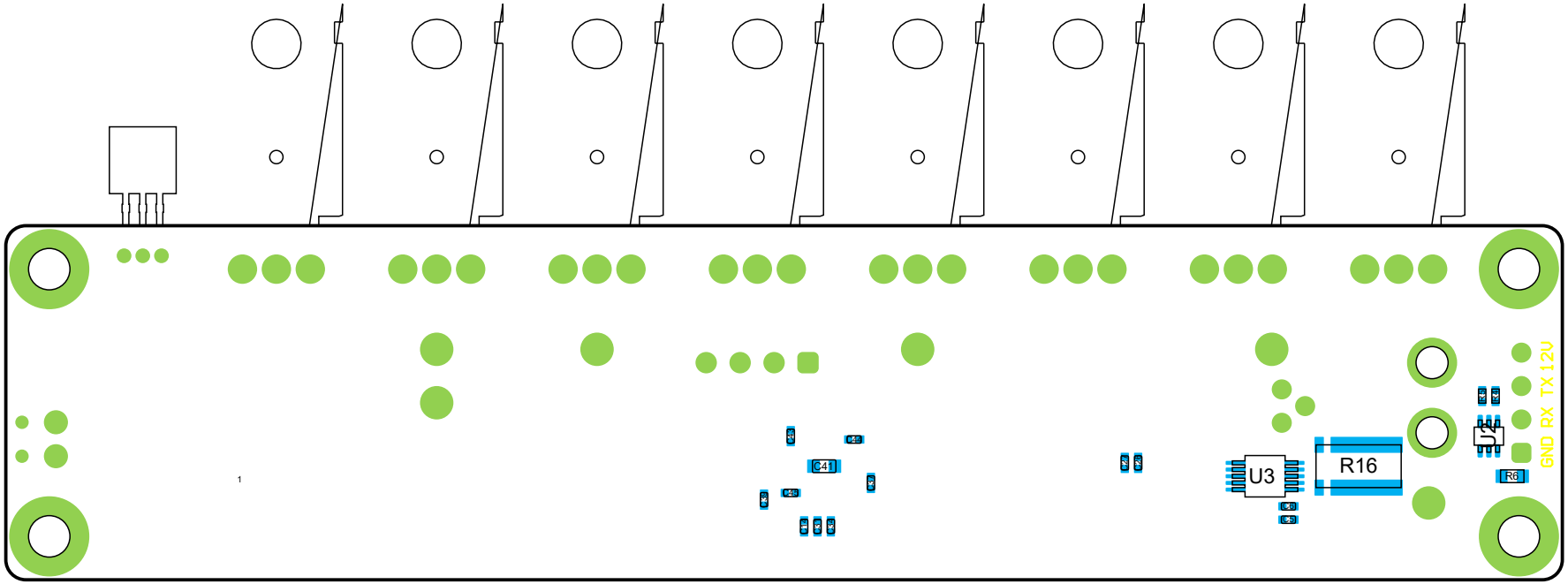

View from Bottom side (Scale 2:1)

View from Front side (Scale 2:1)

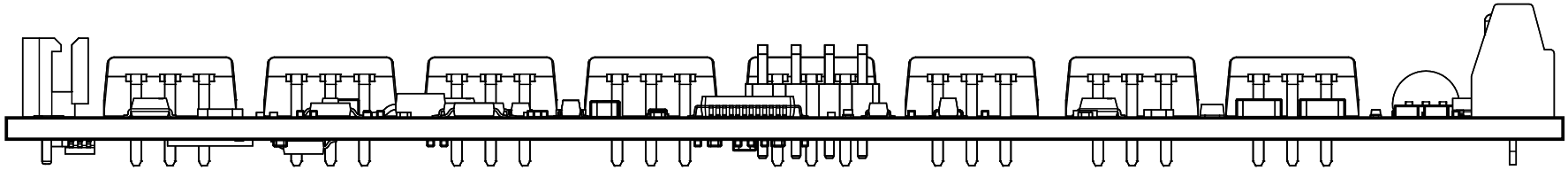

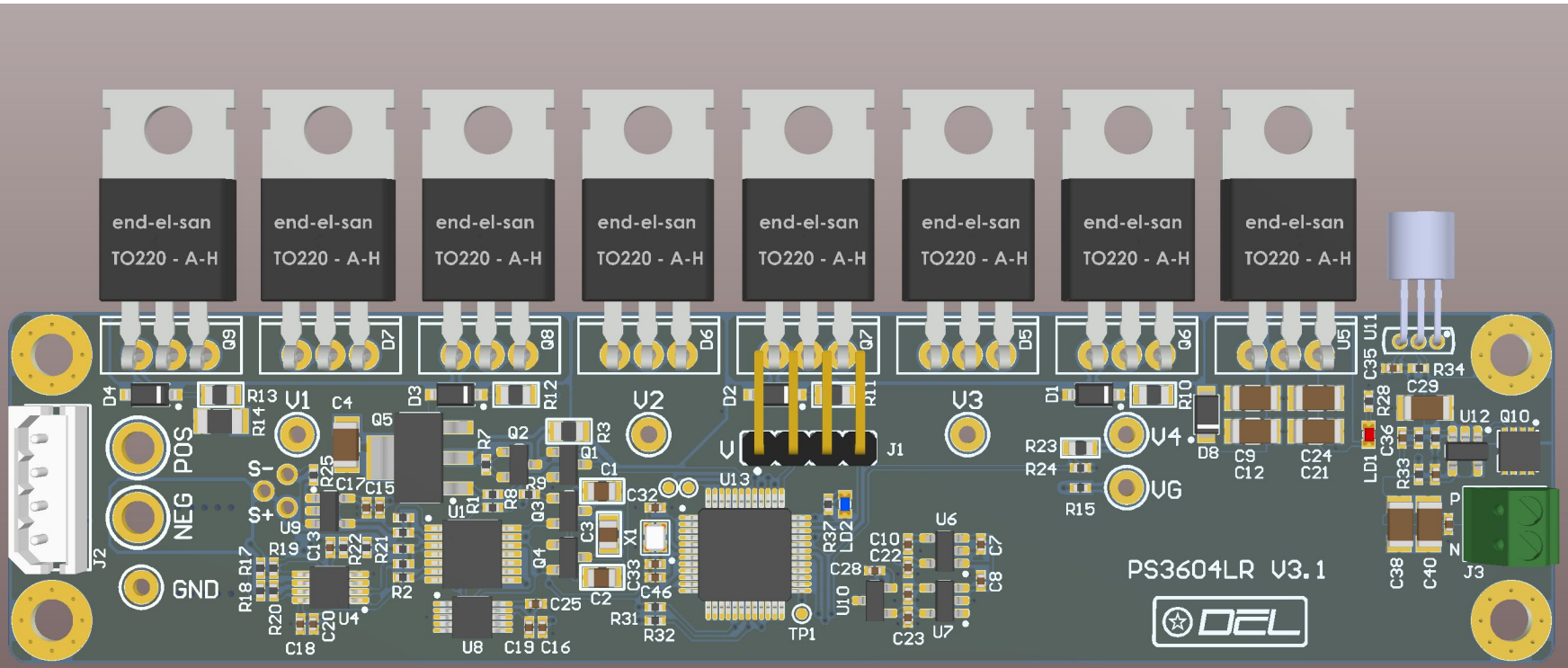
end-el-san
TO220 - A-H
POS
NEG
GND
S-
S+
V1
V2
V3
V4
VG
V
J1
J2
J3
PS3604LR V3.1

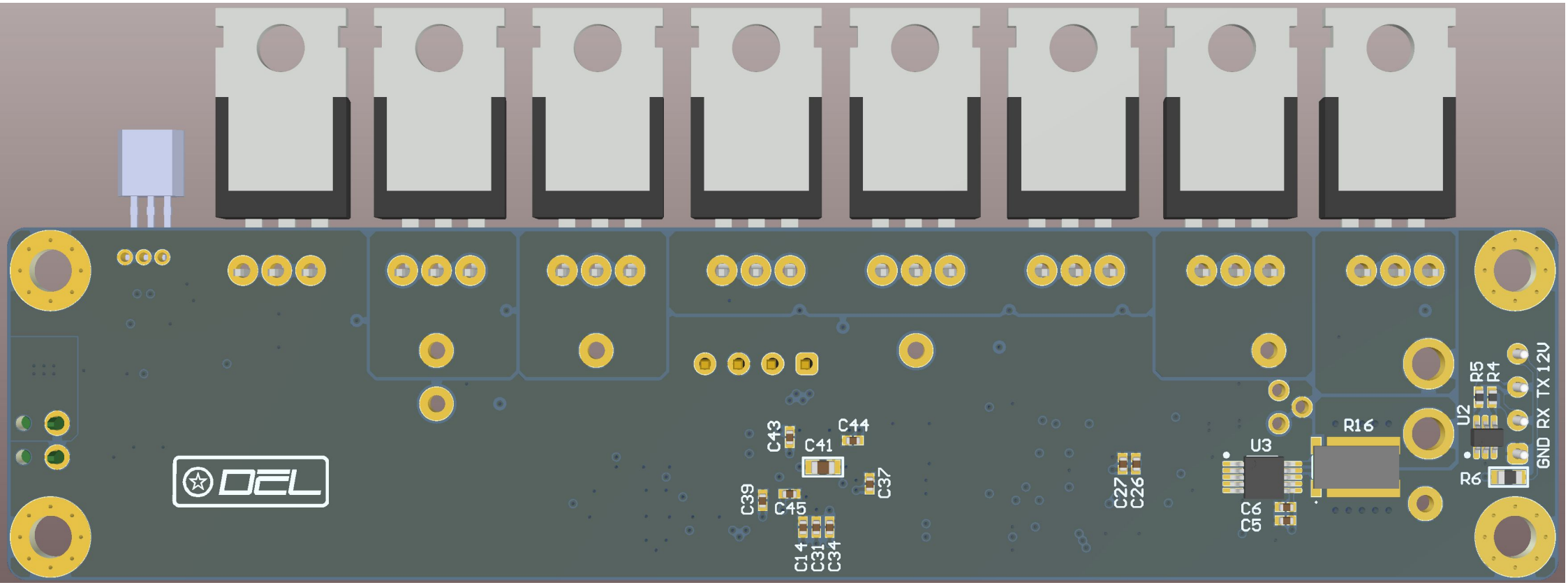
C43
C44
C41
C37
C39
C45
C14
C31
C34
C27
C26
U3
C6
C5
R16
U2
R5
R4
R6
GND
RX
TX
12V