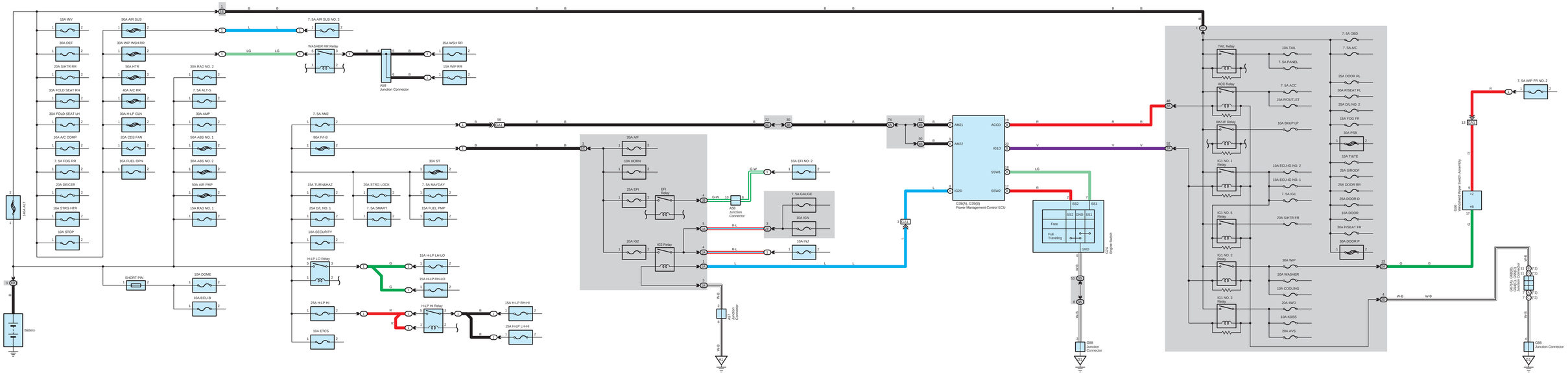
* 1 : Before Aug. 2010 Production
* 2 : From Aug. 2010 Production
15A INV
30A DEF
20A SHTR RR
30A FOLD SEAT RH
30A FOLD SEAT LH
10A A/C COMP
7.5A FOG RR
20A DEICER
10A STRG HTR
10A STOP
160A ALT
Battery
50A AIR SUS
30A WIP WSH RR
50A HTR
40A A/C RR
30A H-LP CLN
20A CDS FAN
10A FUEL OPN
SHORT PIN
10A DOME
10A ECU-B
30A RAD NO. 2
7.5A ALT-S
30A AMP
50A ABS NO. 1
30A ABS NO. 2
50A AIR PMP
15A RAD NO. 1
7.5A AIR SUS NO. 2
WASHER RR Relay
A58 Junction Connector
15A WSH RR
15A WIP RR
7.5A AM2
80A FI-B
15A TURNHAZ
25A D/L NO. 1
10A SECURITY
H-LP LO Relay
25A H-LP HI
10A ETCS
20A STRG LOCK
7.5A SMART
30A ST
7.5A MAYDAY
15A FUEL PMP
15A H-LP LH-LO
15A H-LP RH-LO
H-LP HI Relay
15A H-LP RH-HI
15A H-LP LH-HI
20A AIF
10A HORN
25A EFI
EFI Relay
20A IG2
IG2 Relay
A58 Junction Connector
10A EFI NO. 2
7.5A GAUGE
10A IGN
10A INJ
G38 Junction Connector
AM1
AM2
IG1D
IG2D
ACCD
SSW1
SSW2
G38(A), G39(B)
Power Management Control ECU
SS2
SS1
GND
Free
Full Traveling
CG1 Ignition Switch
G88 Junction Connector
TAIL Relay
ACC Relay
BKUP Relay
IG1 NO. 1 Relay
IG1 NO. 5 Relay
IG1 NO. 2 Relay
IG1 NO. 3 Relay
10A TAIL
7.5A PANEL
7.5A ACC
15A P/OUTLET
10A BKUP LP
10A ECU-IG NO. 2
10A ECU-IG NO. 1
7.5A IG1
20A SHTR FR
30A WIP
20A WASHER
10A COOLING
20A AWD
10A KDSS
20A AVS
7.5A OBD
7.5A A/C
25A DOOR RL
30A P/SEAT FL
25A D/L NO. 2
15A FOG FR
30A PSB
15A TAILTE
25A S/ROOF
25A DOOR RR
25A DOOR D
10A DOOR
30A P/SEAT FR
30A DOOR P
7.5A WIP FR NO. 2
CG01 Combination Switch Assembly
G01 G08(B) G04(C) G05(D) G06(E) G07(F) Connector
G88 Junction Connector