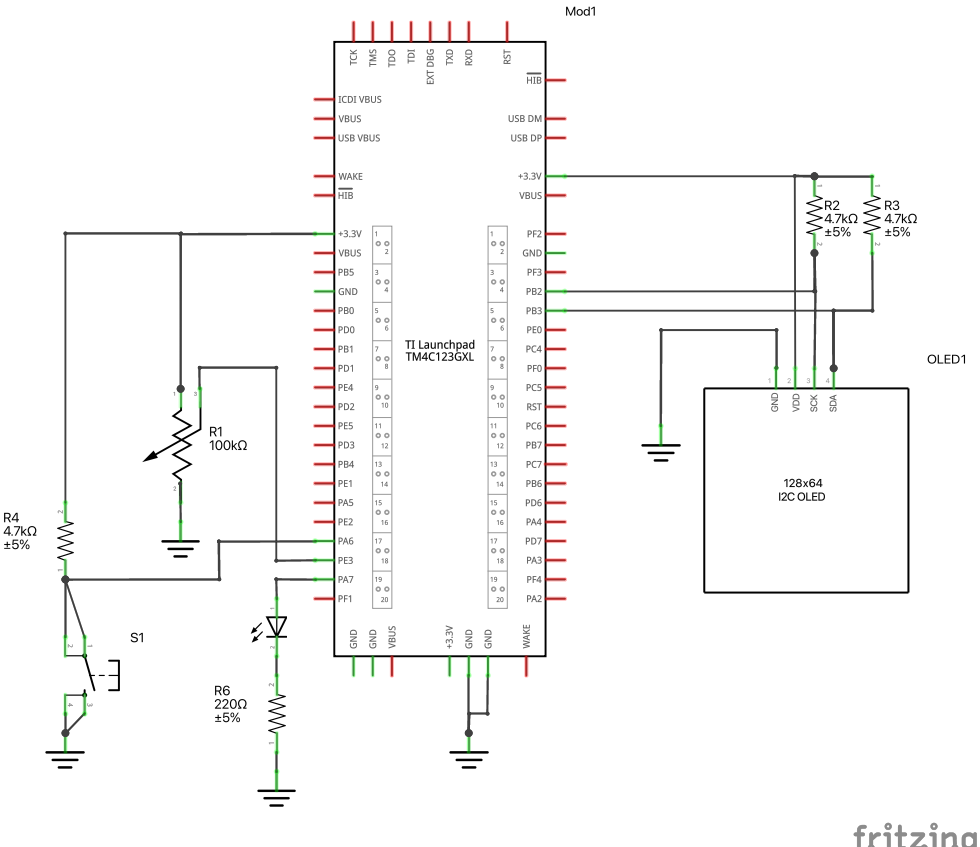
Mod1
TCK
TMS
TDO
TDI
EXT DBG
TXD
RXD
RST
HIB
ICDI VBUS
VBUS
USB VBUS
USB DM
USB DP
WAKE
HIB
+3.3V
VBUS
+3.3V
VBUS
PB5
GND
PB0
PD0
PB1
PD1
PE4
PD2
PE5
PD3
PB4
PE1
PA5
PE2
PA6
PE3
PA7
PF1
PF2
GND
PF3
PB2
PB3
PE0
PC4
PF0
PC5
RST
PC6
PB7
PC7
PB6
PD6
PA4
PD7
PA3
PF4
PA2
TI Launchpad
TM4C123GXL
GND
GND
VBUS
+3.3V
GND
GND
WAKE
R2
4.7kΩ
±5%
R3
4.7kΩ
±5%
OLED1
GND
VDD
SCK
SDA
128x64
I2C OLED
R1
100kΩ
R4
4.7kΩ
±5%
S1
R6
220Ω
±5%
fritzing