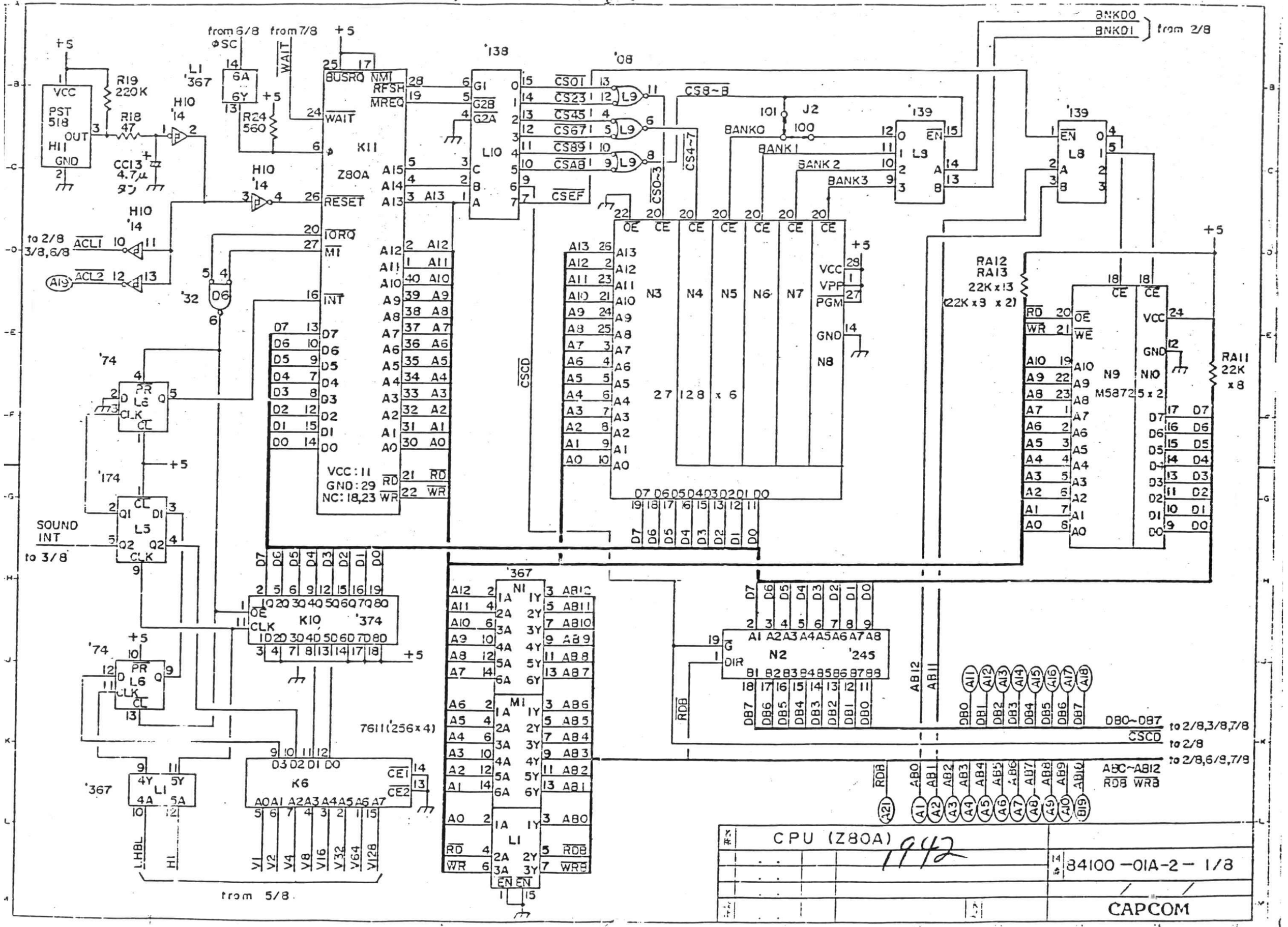
from 6/8 φSC
from 7/8
+5
WAIT
BUSRQ
NMI
RFSH
MREQ
RESET
IORQ
MI
INT
Z80A
K11
'138
L10
G1
G2B
G2A
CSO1
CS23
CS45
CS67
CS89
CSAB
CSEF
CSO~3
CS4~7
CS8~B
'08
L9
BANK0
BANK1
BANK2
BANK3
J2
'139
L9
L8
BNK00
BNK01
from 2/8
VCC
PST 518
OUT
HI1
GND
R19 220K
R18 47
CC13 4.7μ
R24 560
L1 '367
H10 '14
to 2/8 3/8,6/8
ACL1
ACL2
A19
'32
D6
'74
PR
D
LE
CLK
CL
Q
'174
L5
Q1
D1
Q2
CLK
SOUND INT
to 3/8
VCC:11
GND:29
NC:18,23
RD
WR
N3
N4
N5
N6
N7
N8
27128 x 6
OE
CE
VPP
PGM
GND
RA12
RA13
22K x 13
(22K x 9 x 2)
RA11
22K x 8
N9
N10
M5872 5 x 2
K10
'374
L6
K6
7611(256x4)
'367
L1
N1
M1
N2
'245
DIR
DB0~DB7
CSCD
to 2/8,3/8,7/8
to 2/8
to 2/8,6/8,7/8
ABC~AB12
RDB WRB
from 5/8
CPU (Z80A)
1942
84100 -01A-2- 1/8
CAPCOM

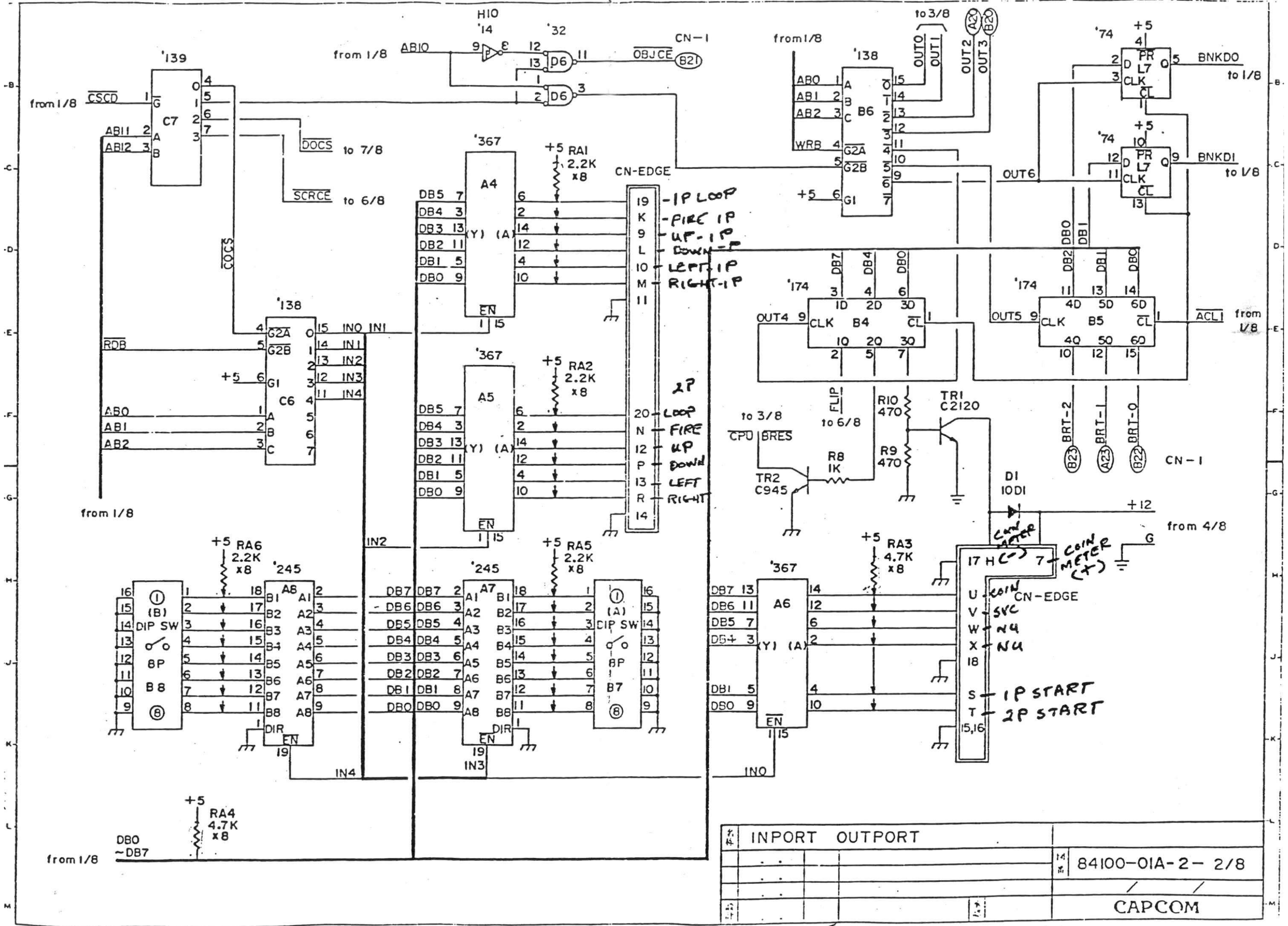

	INPORT OUTPORT		
			84100-01A-2- 2/8
			CAPCOM

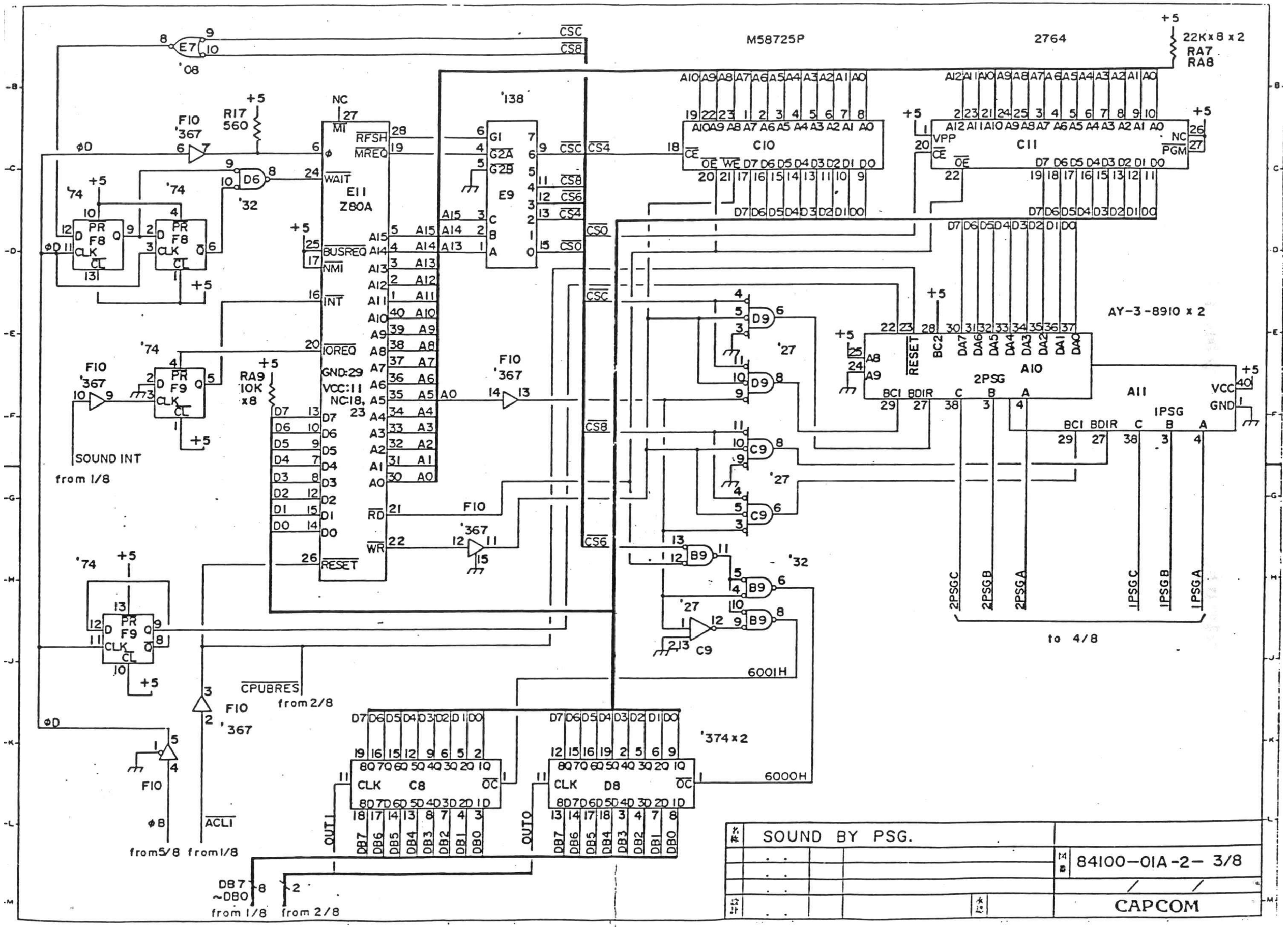
M58725P
2764
22K x 8 x 2
RA7
RA8
E7
'08
F10
'367
R17
560
D6
'32
'74
PR
F8
CLK
CL
E11
Z80A
NC
MI
RFSH
MREQ
WAIT
BUSREQ
NMI
INT
IOREQ
GND:29
VCC:11
NC:18, 23
RESET
'138
E9
G1
G2A
G2B
CSC
CS8
CS6
CS4
CS0
C10
C11
VPP
CE
OE
WE
PGM
D9
C9
B9
'27
'32
A8
A9
AY-3-8910 x 2
A10
2PSG
A11
1PSG
RESET
BC2
BCI
BDIR
VCC
GND
2PSGC
2PSGB
2PSGA
1PSGC
1PSGB
1PSGA
to 4/8
F9
RA9
10K
x8
SOUND INT
from 1/8
CPUBRES
from 2/8
6001H
6000H
'374 x 2
C8
D8
OUT1
OUT0
ACLI
from 5/8
from 1/8
DB7
~DB0
from 1/8
from 2/8
SOUND BY PSG.
84100-01A-2- 3/8
CAPCOM

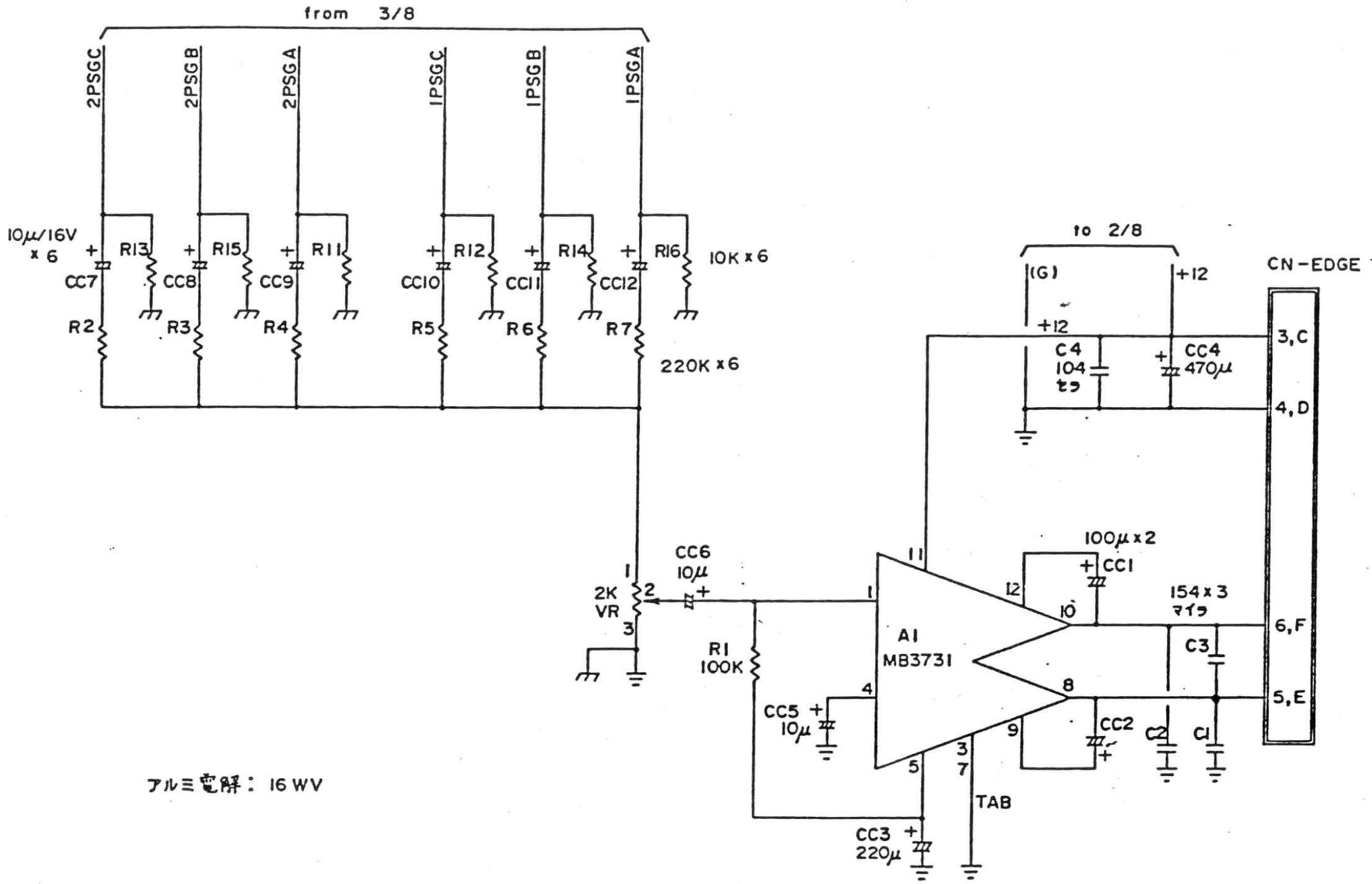

アルミ電解： 16 WV

名称	MAIN AMP.	
		図番 84100 −01A-2− 4/8
		/ /
設計	承認	CAPCOM

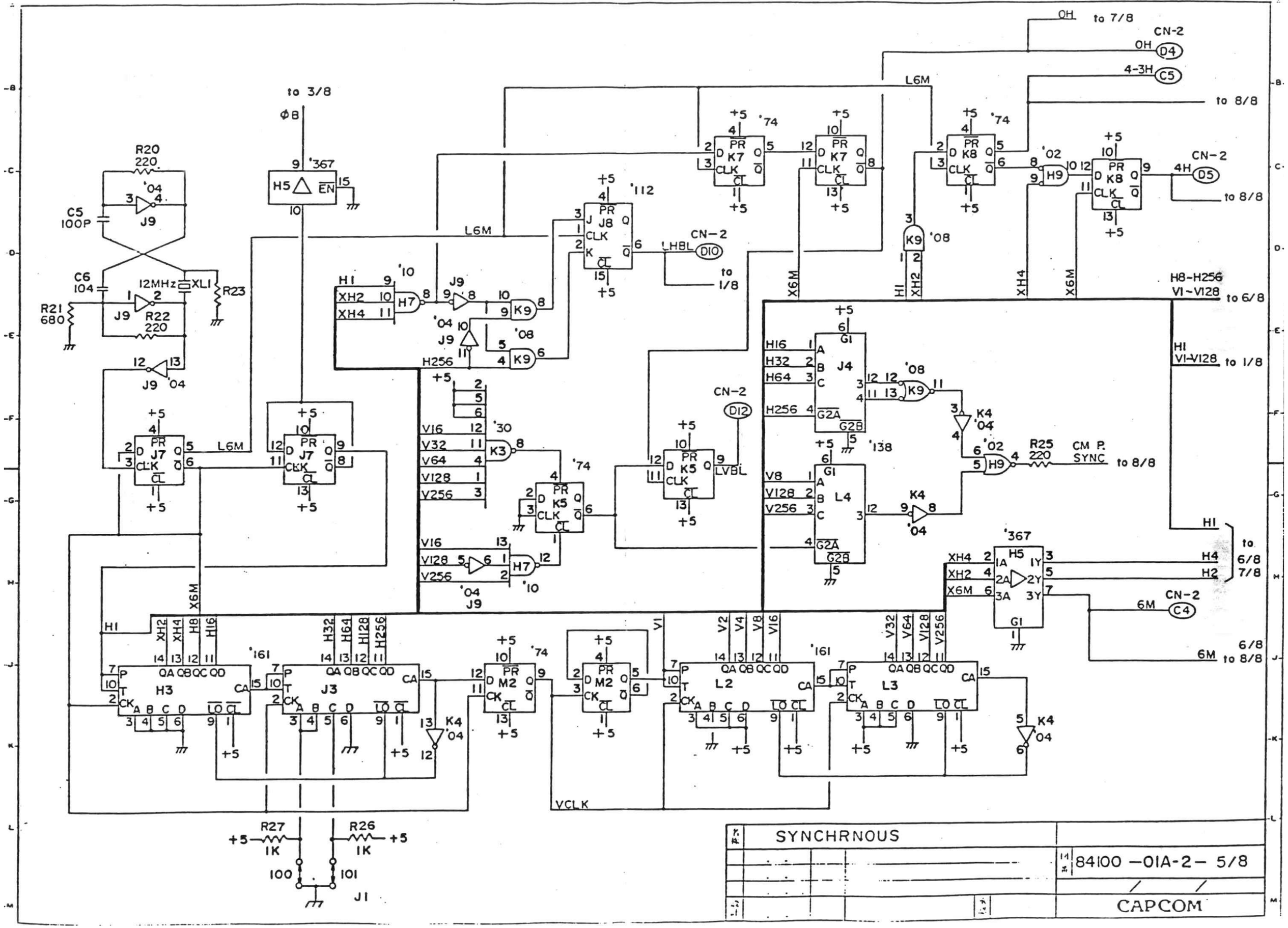
SYNCHRNOUS
84100 -01A-2- 5/8
CAPCOM
R20 220
C5 100P
C6 104
R21 680
R22 220
R23
12MHz
XL1
J9 '04
H5 '367
H7 '10
K9 '08
J8 '112
K7 '74
K8 '74
H9 '02
J7
J4 '138
L4
K5
K3 '30
M2
H3 '161
J3
L2
L3
K4 '04
R25 220
CM P. SYNC
CN-2
D4 OH
C5 4-3H
D5 4H
D10 LHBL
D12 LVBL
C4 6M
to 7/8
to 8/8
to 1/8
to 6/8
to 6/8 7/8
H8-H256 V1-V128
H1 V1-V128
R27 1K
R26 1K
J1
100
101
VCLK

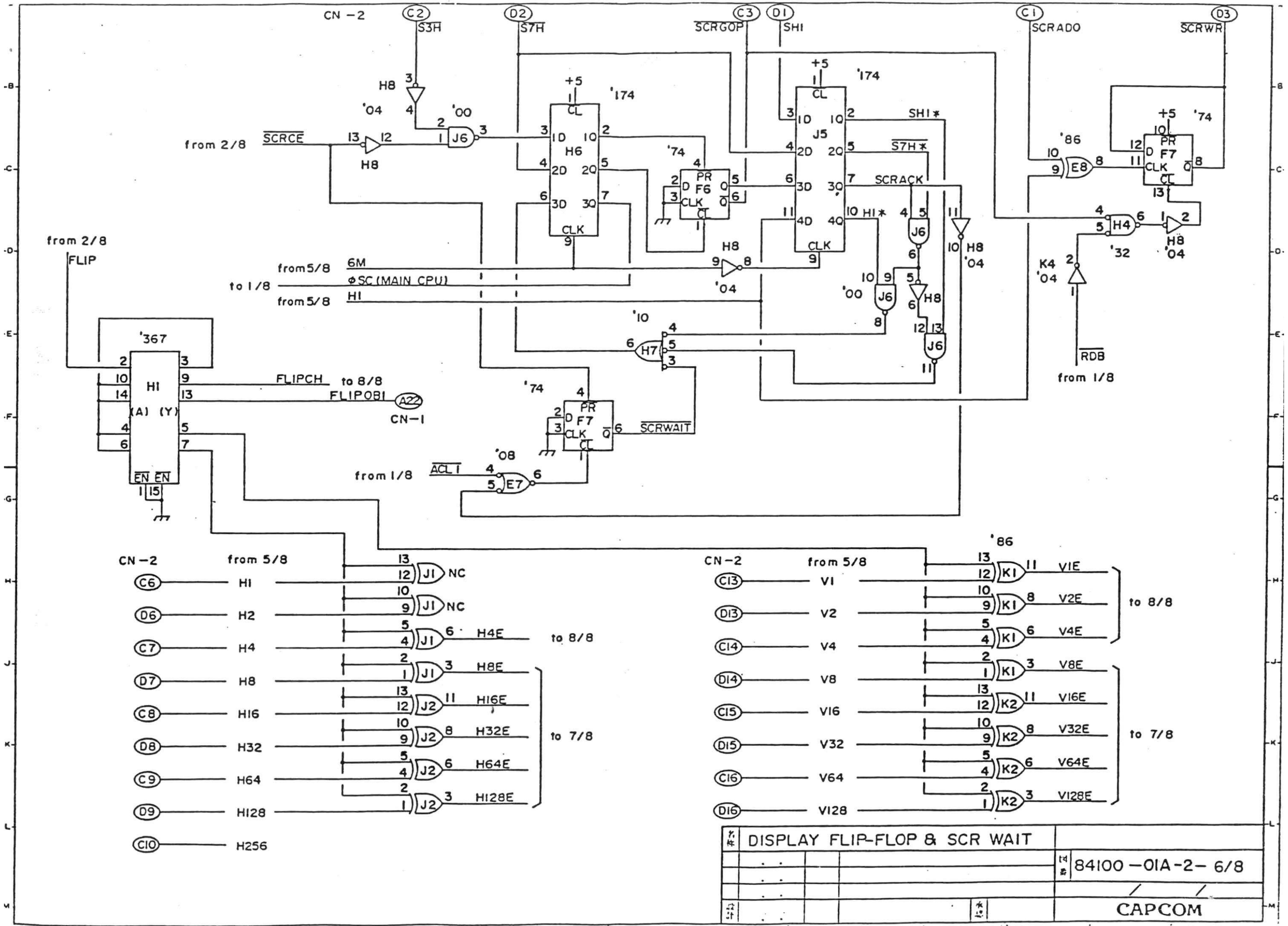
CN -2
C2 S3H
D2 S7H
C3 SCRGOP
D1 SHI
C1 SCRADO
D3 SCRWR
H8 '04
'00 J6
from 2/8 SCRCE
H8
+5
'174 H6
'74 PR F6 CLK CL
'174 J5
SHI*
S7H*
SCRACK
HI*
'86 E8
'74 PR F7 CLK CL
H4 '32
H8 '04
K4 '04
RDB
from 1/8
from 2/8 FLIP
from 5/8 6M
to 1/8 ΦSC (MAIN CPU)
from 5/8 HI
'367 HI (A) (Y) EN EN
FLIPCH
to 8/8
FLIPOBI
A22
CN-1
'10 H7
'74 PR F7 CLK CL
SCRWAIT
'08 E7
from 1/8 ACL I
CN -2 from 5/8
C6 HI J1 NC
D6 H2 J1 NC
C7 H4 J1 6 H4E
D7 H8 J1 3 H8E
C8 H16 J2 11 H16E
D8 H32 J2 8 H32E
C9 H64 J2 6 H64E
D9 HI28 J2 3 HI28E
C10 H256
to 8/8
to 7/8
CN -2 from 5/8
C13 VI K1 11 VIE
D13 V2 K1 8 V2E
C14 V4 K1 6 V4E
D14 V8 K1 3 V8E
C15 V16 K2 11 V16E
D15 V32 K2 8 V32E
C16 V64 K2 6 V64E
D16 V128 K2 3 V128E
to 8/8
to 7/8
DISPLAY FLIP-FLOP & SCR WAIT
84100 -01A-2- 6/8
CAPCOM

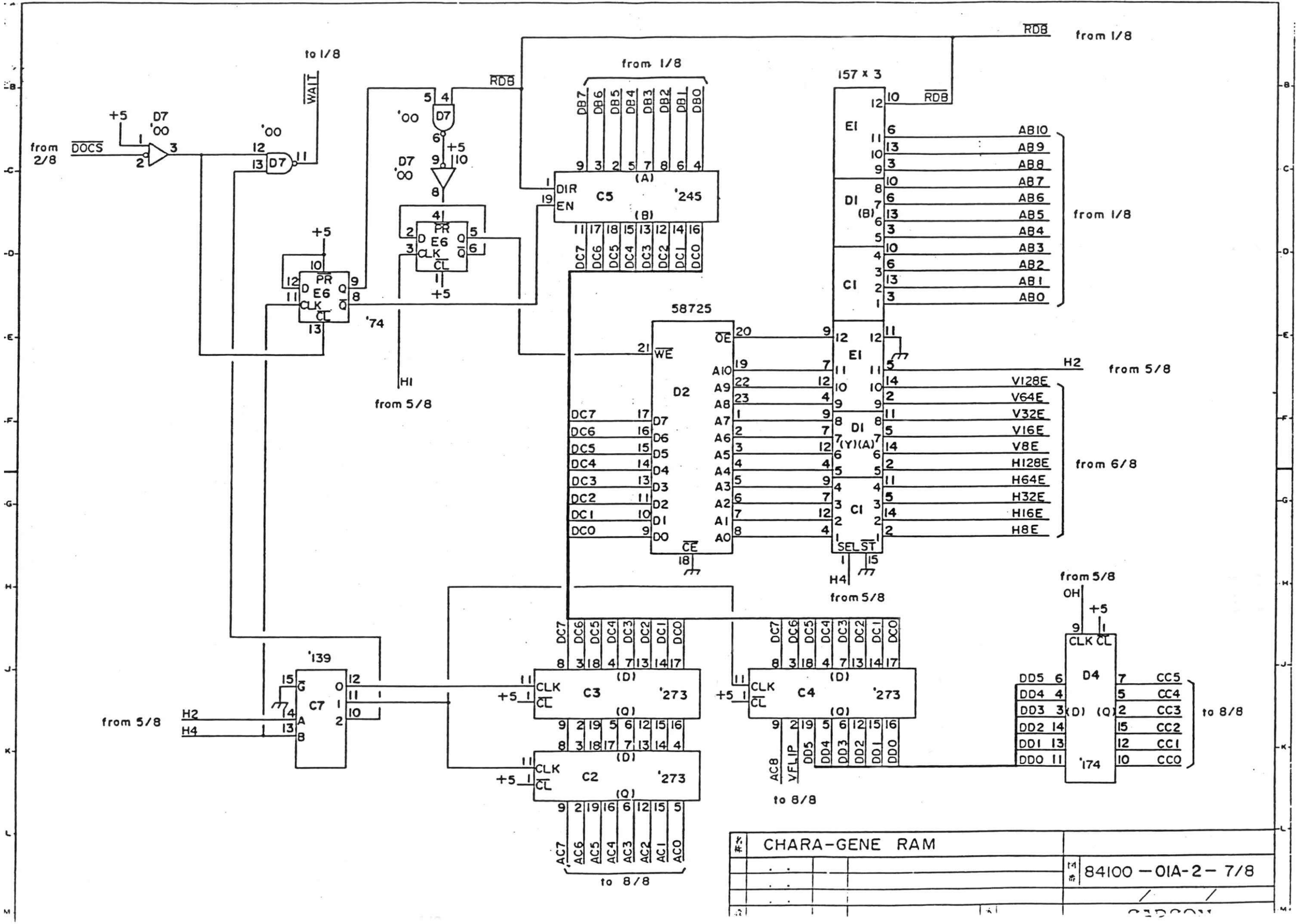
from 2/8
DOCS
+5
D7
'00
to 1/8
WAIT
RDB
from 1/8
157 x 3
E1
D1
(B)
C1
AB10
AB9
AB8
AB7
AB6
AB5
AB4
AB3
AB2
AB1
AB0
from 1/8
C5
'245
DIR
EN
(A)
(B)
DB7
DB6
DB5
DB4
DB3
DB2
DB1
DB0
DC7
DC6
DC5
DC4
DC3
DC2
DC1
DC0
E6
'74
HI
from 5/8
58725
D2
WE
OE
CE
A10
A9
A8
A7
A6
A5
A4
A3
A2
A1
A0
D7
D6
D5
D4
D3
D2
D1
D0
H2
from 5/8
V128E
V64E
V32E
V16E
V8E
H128E
H64E
H32E
H16E
H8E
from 6/8
(Y)(A)
SEL
ST
H4
from 5/8
'139
C7
G
A
B
H2
H4
from 5/8
C3
C2
C4
'273
CLK
CL
(D)
(Q)
AC7
AC6
AC5
AC4
AC3
AC2
AC1
AC0
to 8/8
AC8
VFLIP
DD5
DD4
DD3
DD2
DD1
DD0
to 8/8
from 5/8
OH
D4
'174
CC5
CC4
CC3
CC2
CC1
CC0
to 8/8
CHARA-GENE RAM
84100 —01A-2— 7/8

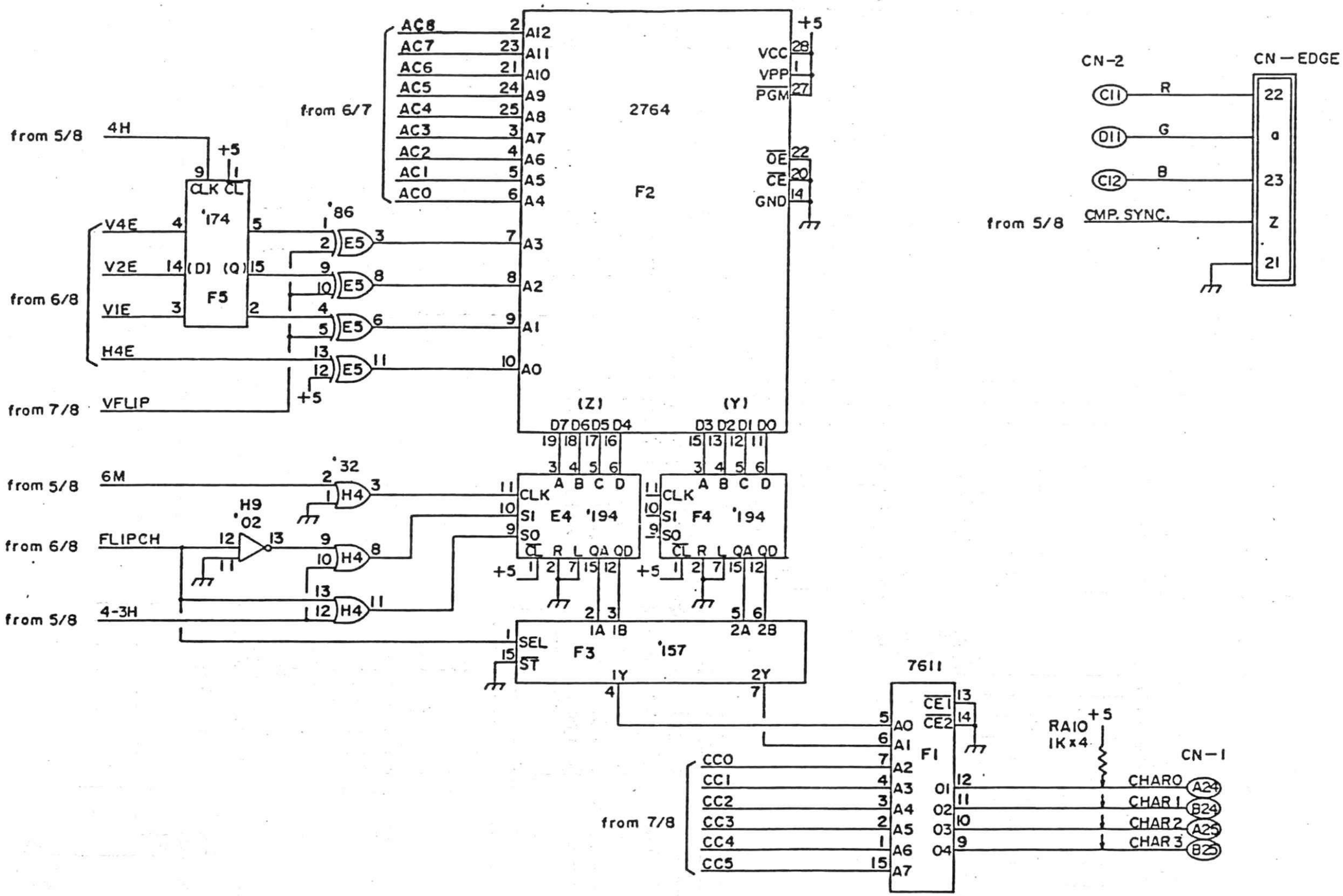

	CHARA-GENE ROM	
		84100 —01A-2— 8/8
		CAPCOM

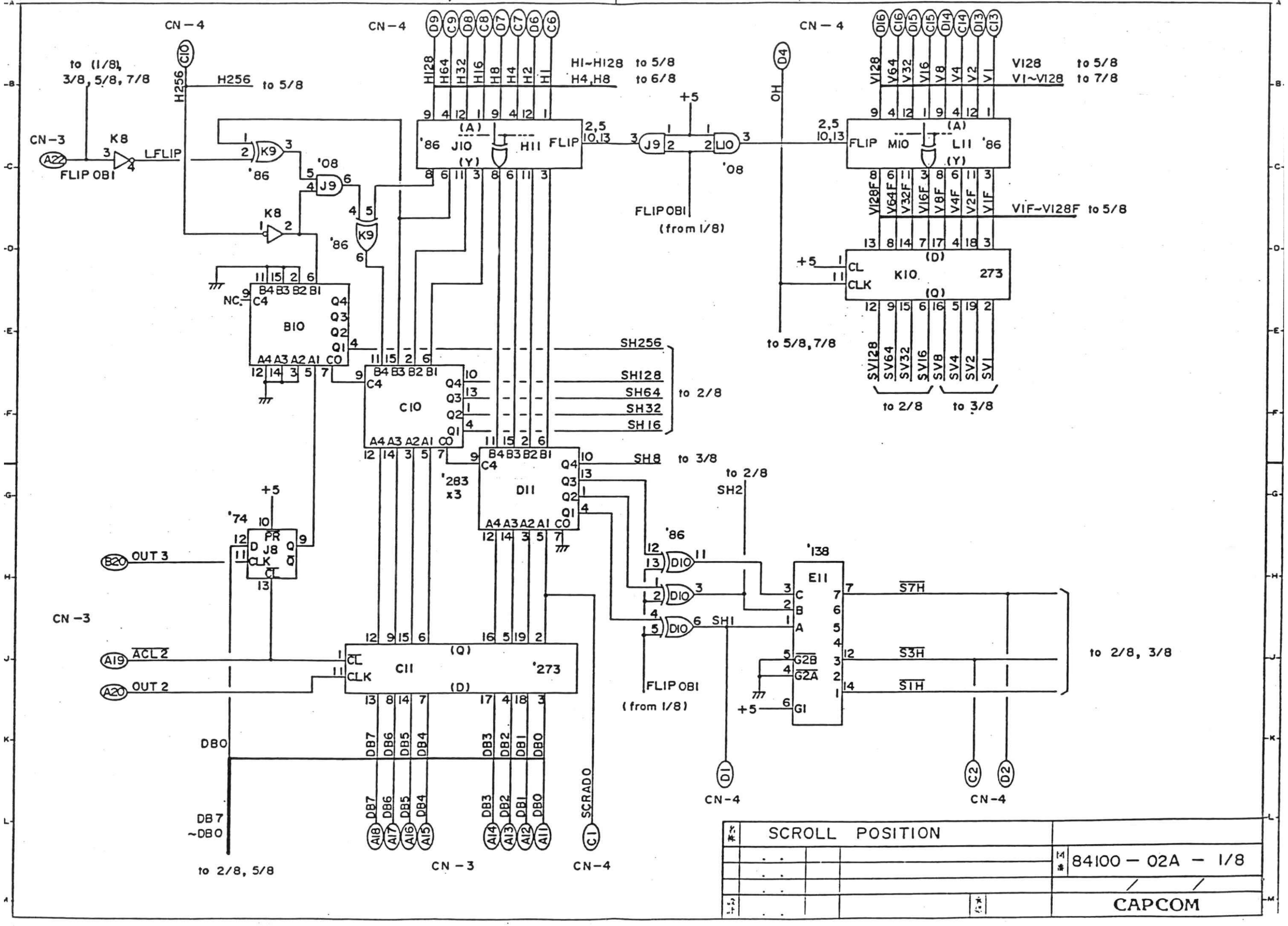
CN-4
CN-3
to (1/8), 3/8, 5/8, 7/8
H256
to 5/8
K8
LFLIP
FLIP 0B1
K9
'86
'08
J9
B10
NC
C10
'283 x3
D11
'74
J8
OUT 3
ACL 2
OUT 2
C11
'273
DB0
DB7 ~DB0
to 2/8, 5/8
H1-H128
H4, H8
to 6/8
J10
H11
FLIP
+5
J9
L10
FLIP 0B1 (from 1/8)
SH256
SH128
SH64
SH32
SH16
to 2/8
SH8
to 3/8
SH2
SH1
D10
E11
'138
S7H
S3H
S1H
to 2/8, 3/8
SCRADO
V128
V1~V128
V1F~V128F
to 5/8
M10
L11
K10
273
0H
to 5/8, 7/8
SV128
SV64
SV32
SV16
SV8
SV4
SV2
SV1
to 2/8
to 3/8
SCROLL POSITION
84100 - 02A - 1/8
CAPCOM

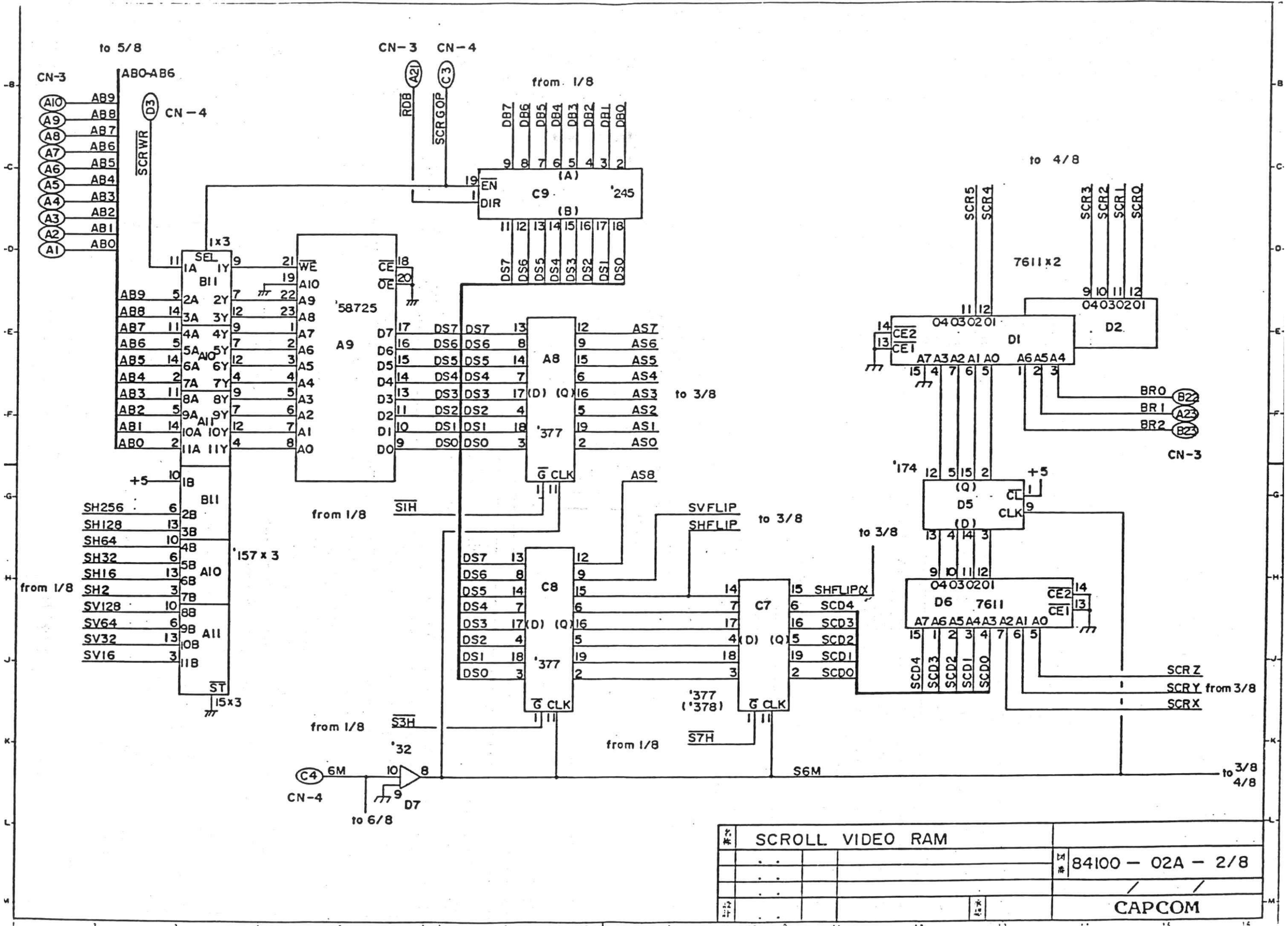

SCROLL VIDEO RAM		
		84100 — 02A — 2/8
		CAPCOM

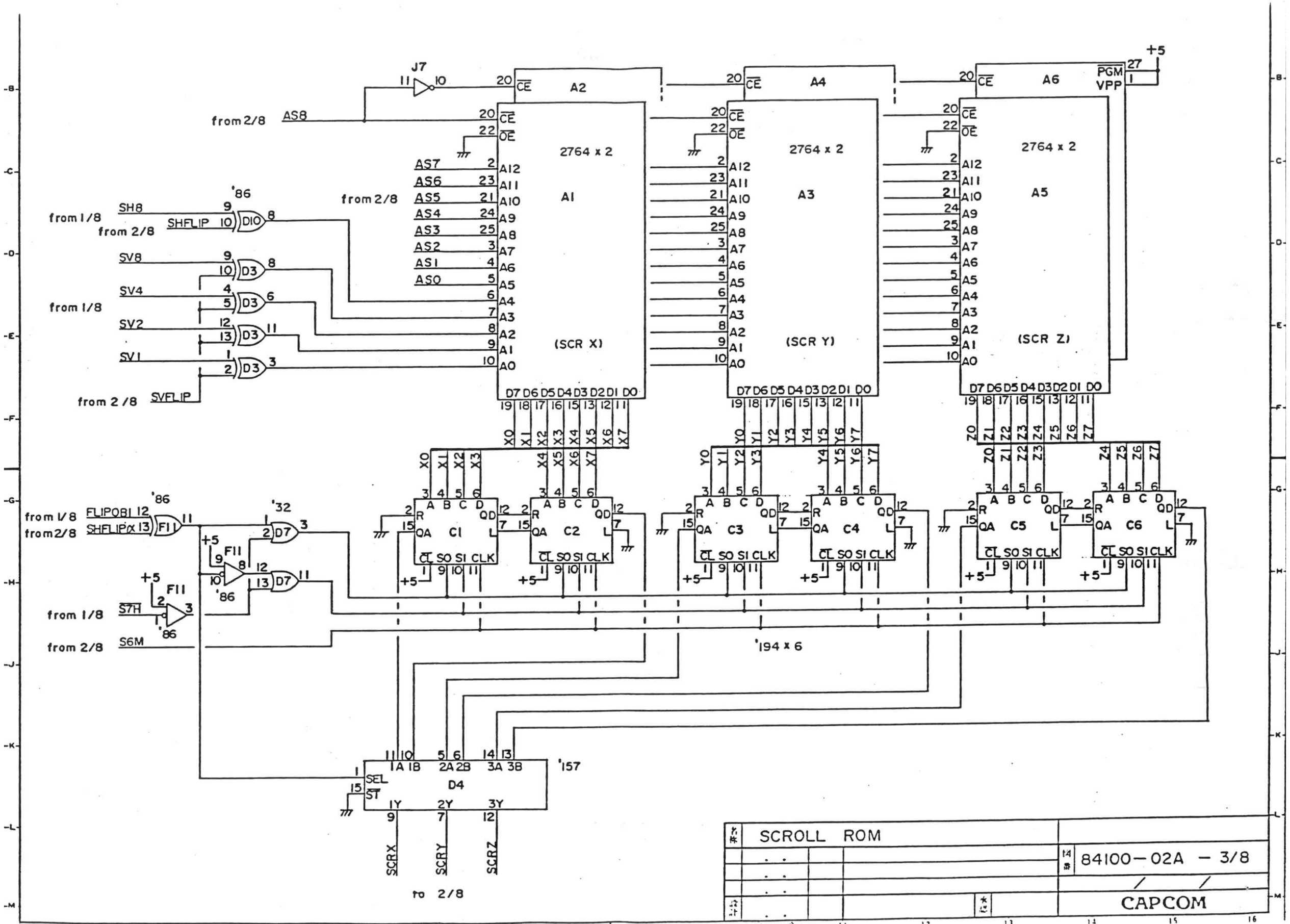
J7
from 2/8
AS8
CE
OE
A2
2764 x 2
A1
(SCR X)
AS7
AS6
AS5
AS4
AS3
AS2
AS1
AS0
A12
A11
A10
A9
A8
A7
A6
A5
A4
A3
A2
A1
A0
D7 D6 D5 D4 D3 D2 D1 D0
X0 X1 X2 X3 X4 X5 X6 X7
A4
A3
(SCR Y)
Y0 Y1 Y2 Y3 Y4 Y5 Y6 Y7
A6
A5
(SCR Z)
Z0 Z1 Z2 Z3 Z4 Z5 Z6 Z7
PGM
VPP
+5
'86
from 1/8
SH8
SHFLIP
DIO
SV8
SV4
SV2
SV1
D3
SVFLIP
FLIPOBI
SHFLIP
F11
'32
D7
S7H
S6M
C1
C2
C3
C4
C5
C6
R
QA
QD
L
A B C D
CL SO SI CLK
'194 x 6
D4
SEL
ST
1A 1B 2A 2B 3A 3B
1Y 2Y 3Y
'157
SCRX
SCRY
SCRZ
to 2/8
SCROLL ROM
84100-02A - 3/8
CAPCOM

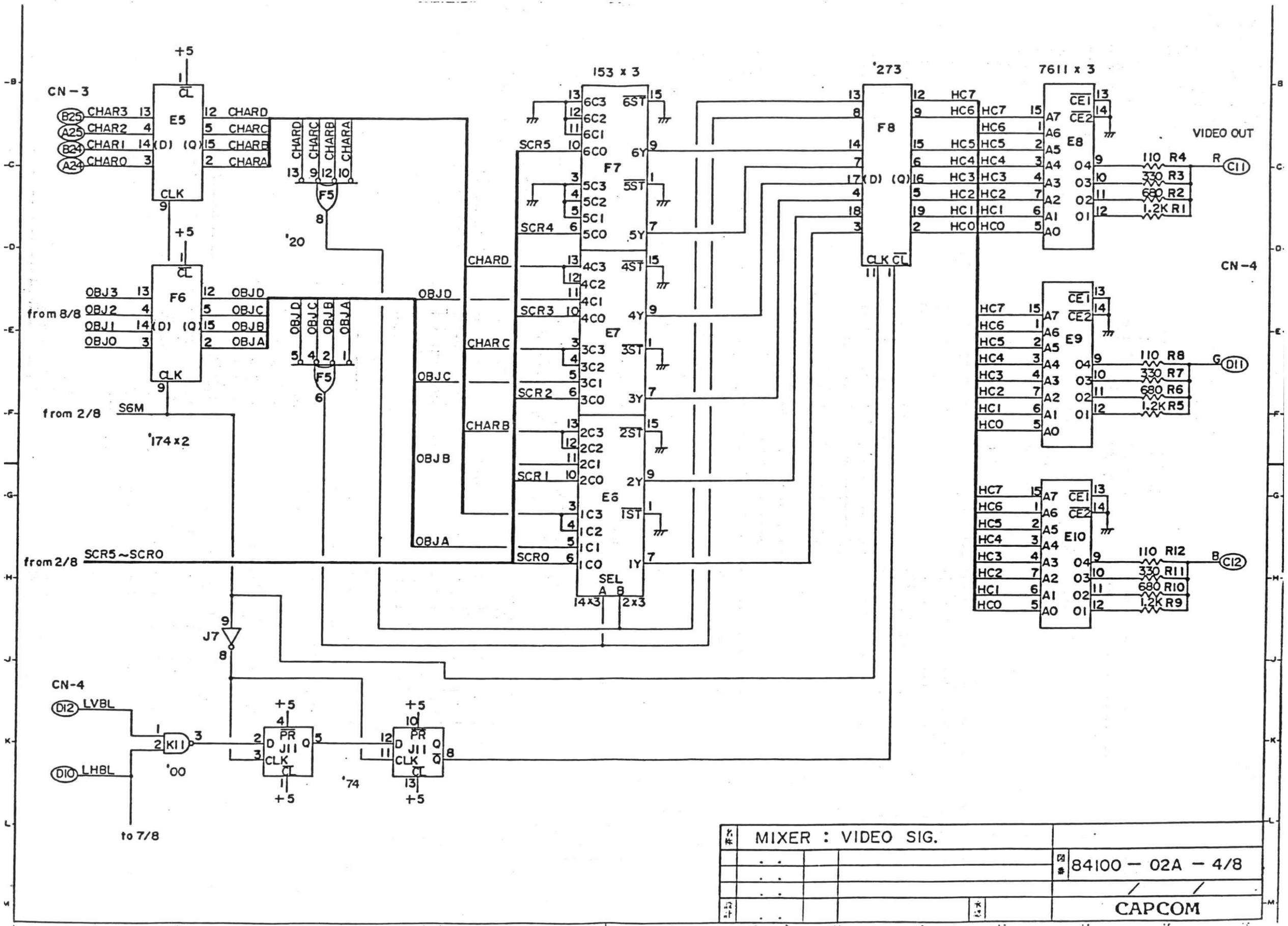
CN-3
CHAR3
CHAR2
CHAR1
CHAR0
E5
CHARD
CHARC
CHARB
CHARA
F5
'20
F6
OBJ3
OBJ2
OBJ1
OBJ0
from 8/8
OBJD
OBJC
OBJB
OBJA
S6M
from 2/8
'174 x2
153 x 3
F7
E7
E6
SCR5
SCR4
SCR3
SCR2
SCR1
SCR0
SEL
14x3
2x3
from 2/8 SCR5~SCR0
'273
F8
HC7
HC6
HC5
HC4
HC3
HC2
HC1
HC0
7611 x 3
E8
E9
E10
VIDEO OUT
CN-4
110 R4
330 R3
680 R2
1.2K R1
110 R8
330 R7
680 R6
1.2K R5
110 R12
330 R11
680 R10
1.2K R9
R C11
G D11
B C12
J7
CN-4
LVBL
LHBL
K11
'00
J11
'74
to 7/8
MIXER : VIDEO SIG.
84100 — 02A — 4/8
CAPCOM

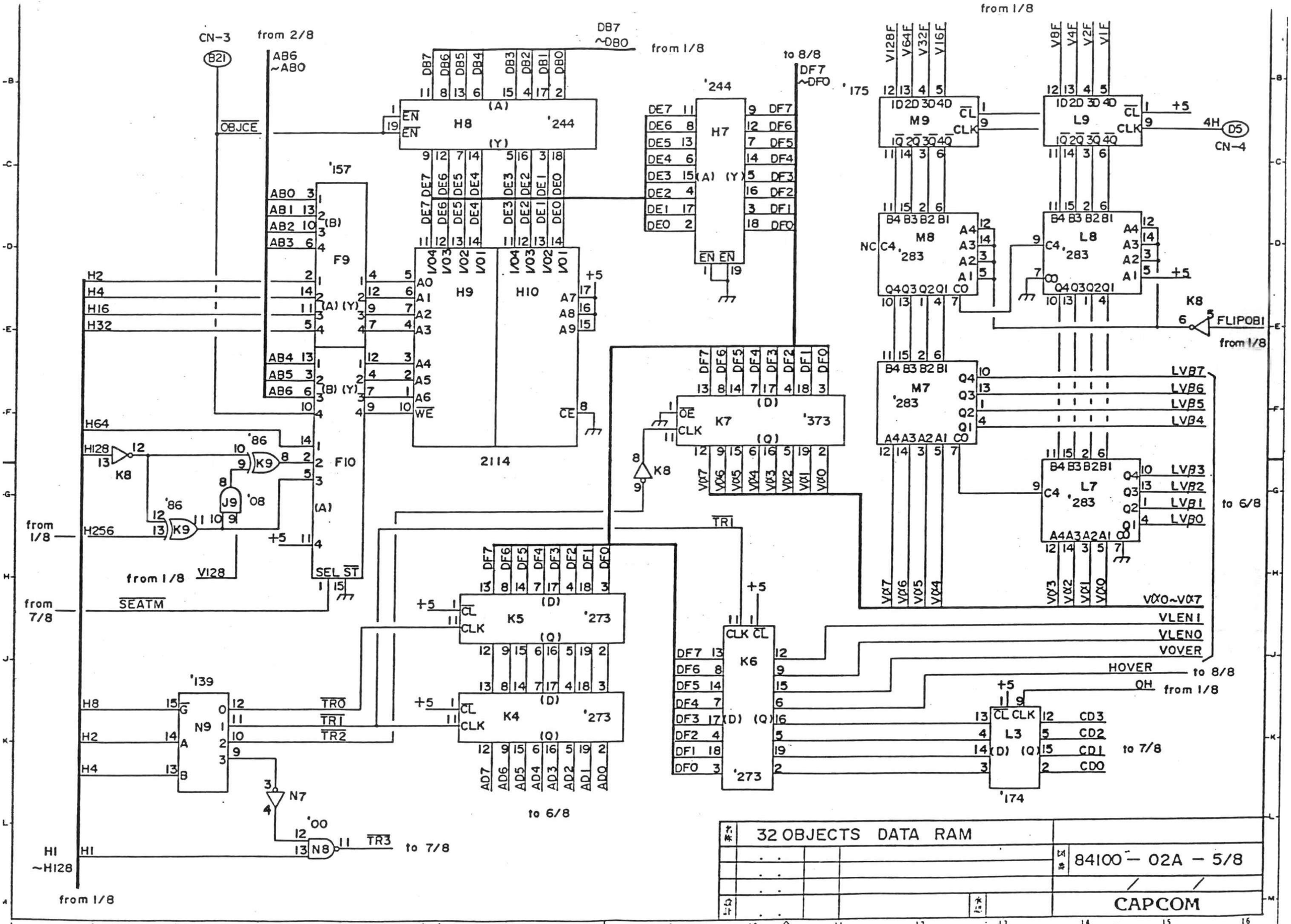
CN-3
B21
from 2/8
AB6
~AB0
OBJCE
DB7
~DB0
from 1/8
to 8/8
DF7
~DF0
H8
'244
(A)
(Y)
EN
H7
DE7
DE6
DE5
DE4
DE3
DE2
DE1
DE0
DF7
DF6
DF5
DF4
DF3
DF2
DF1
DF0
'157
F9
AB0
AB1
AB2
AB3
AB4
AB5
AB6
H2
H4
H16
H32
H9
H10
2114
A0
A1
A2
A3
A4
A5
A6
WE
A7
A8
A9
CE
+5
K7
'373
(D)
(Q)
OE
CLK
K8
VI28
VI64
VI32
VI16
VI8
VI4
VI2
VI1
M9
L9
M8
L8
M7
L7
'283
C4
CL
4H
D5
CN-4
FLIP081
LVB7
LVB6
LVB5
LVB4
LVB3
LVB2
LVB1
LVB0
to 6/8
H64
H128
'86
K9
J9
'08
F10
H256
SEL
ST
SEATM
from 7/8
TRI
K5
'273
K4
K6
VOX0~VOX7
VLEN1
VLEN0
VOVER
HOVER
OH
L3
'174
CD3
CD2
CD1
CD0
to 7/8
'139
N9
TR0
TR1
TR2
N7
'00
N8
TR3
H1
~H128
AD7
AD6
AD5
AD4
AD3
AD2
AD1
AD0
32 OBJECTS DATA RAM
84100 - 02A - 5/8
CAPCOM

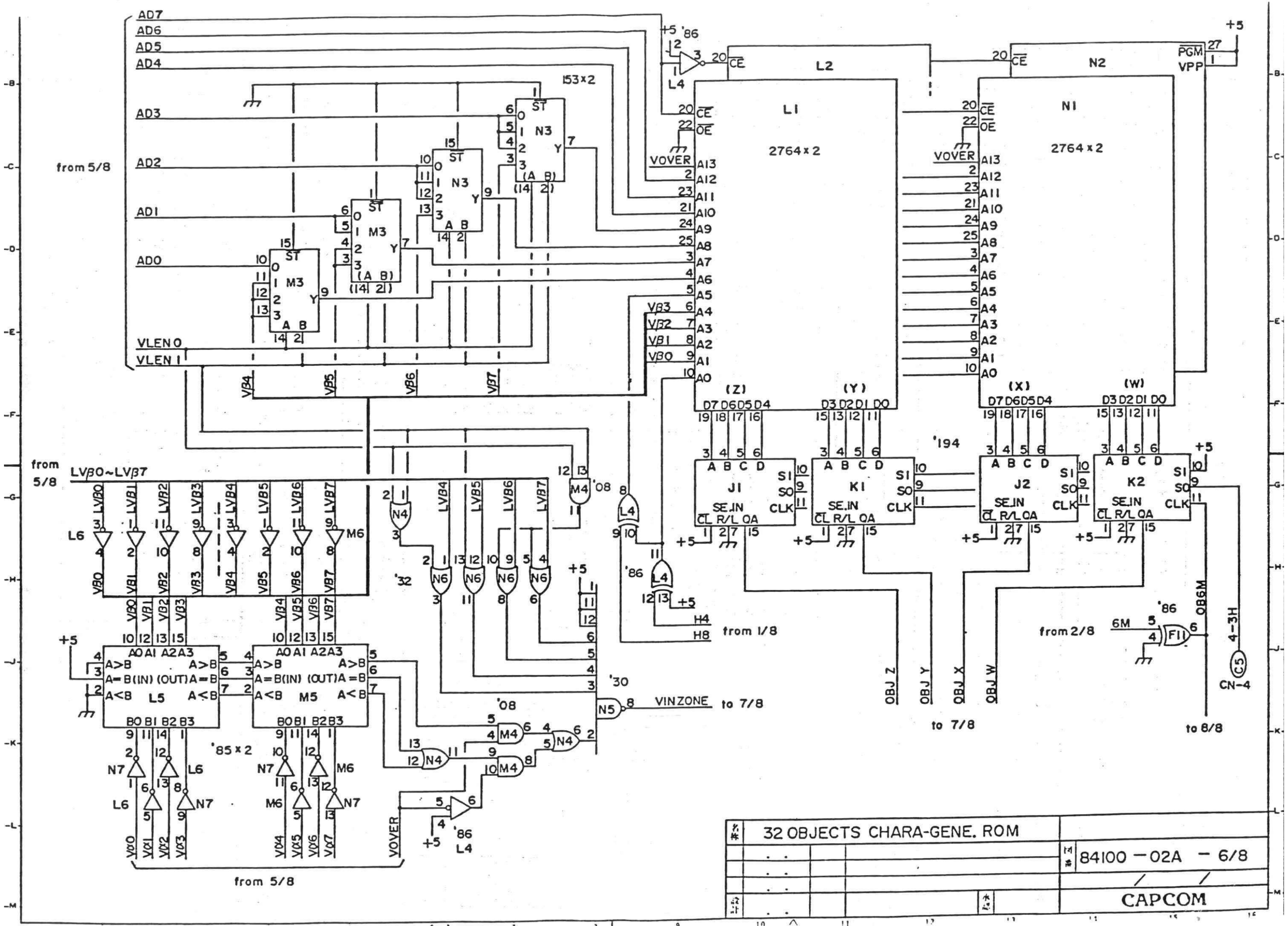
AD7
AD6
AD5
AD4
AD3
AD2
AD1
AD0
from 5/8
VLEN0
VLEN1
153x2
M3
N3
ST
(A B)
(14 2)
VB3
VB2
VB1
VB0
VB4
VB5
VB6
VB7
+5 '86
L4
CE
OE
VOVER
L1
2764x2
L2
N1
N2
PGM
VPP
27
(Z)
(Y)
(X)
(W)
D7 D6 D5 D4
D3 D2 D1 D0
'194
J1
K1
J2
K2
SE.IN
CL R/L QA
S1
S0
CLK
from 5/8
LVB0~LVB7
L6
M6
'08
'32
'30
N4
N6
N5
H4
H8
from 1/8
VINZONE
to 7/8
OBJ Z
OBJ Y
OBJ X
OBJ W
to 7/8
from 2/8
6M
F11
QB6M
4-3H
C5
CN-4
to 8/8
A0 A1 A2 A3
A>B
A=B(IN) (OUT) A=B
A<B
L5
M5
B0 B1 B2 B3
'85 x 2
N7
VO0
VO1
VO2
VO3
VO4
VO5
VO6
VO7
VOVER
from 5/8
32 OBJECTS CHARA-GENE. ROM
84100 -02A - 6/8
CAPCOM

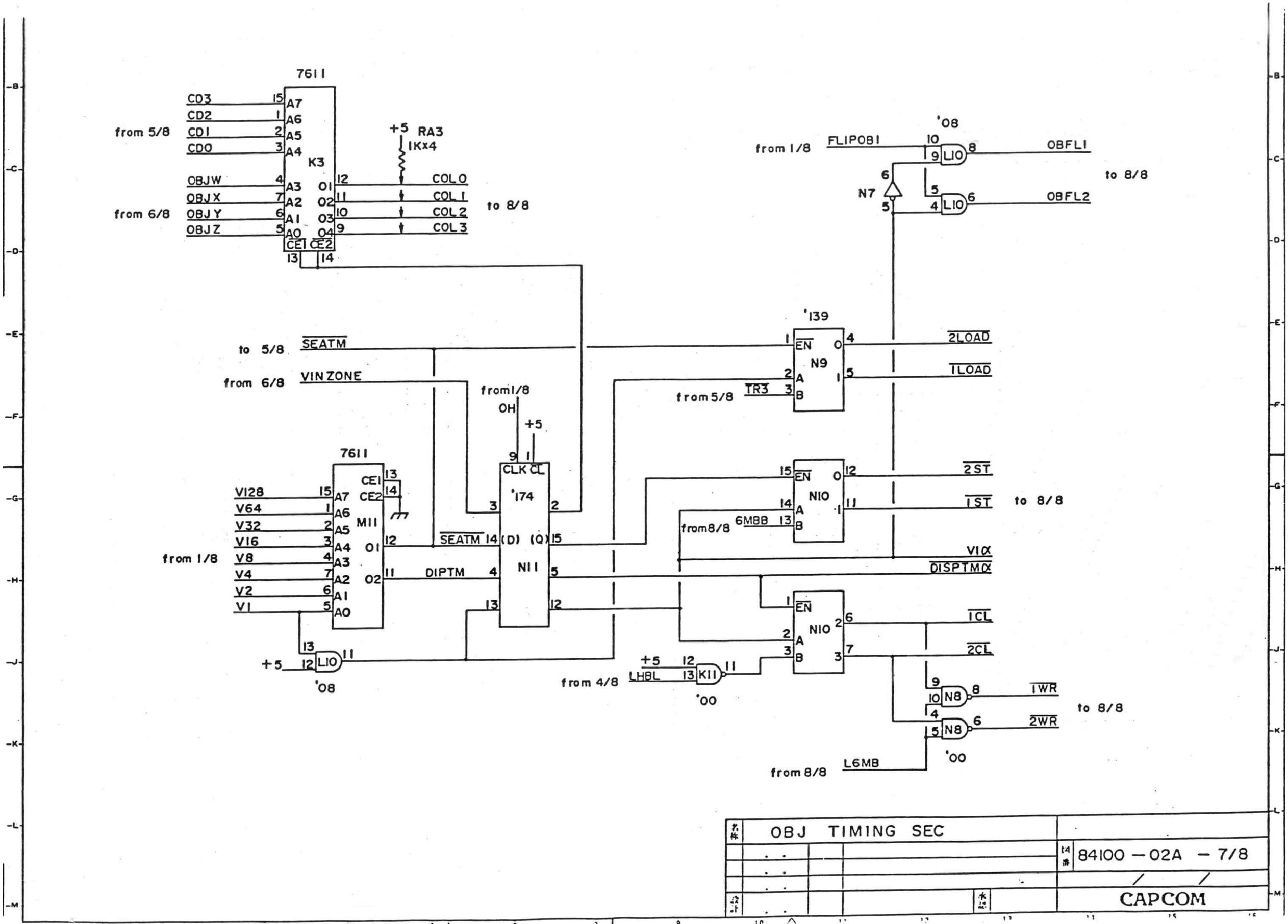

	OBJ TIMING SEC	
		84100 — 02A — 7/8
		CAPCOM

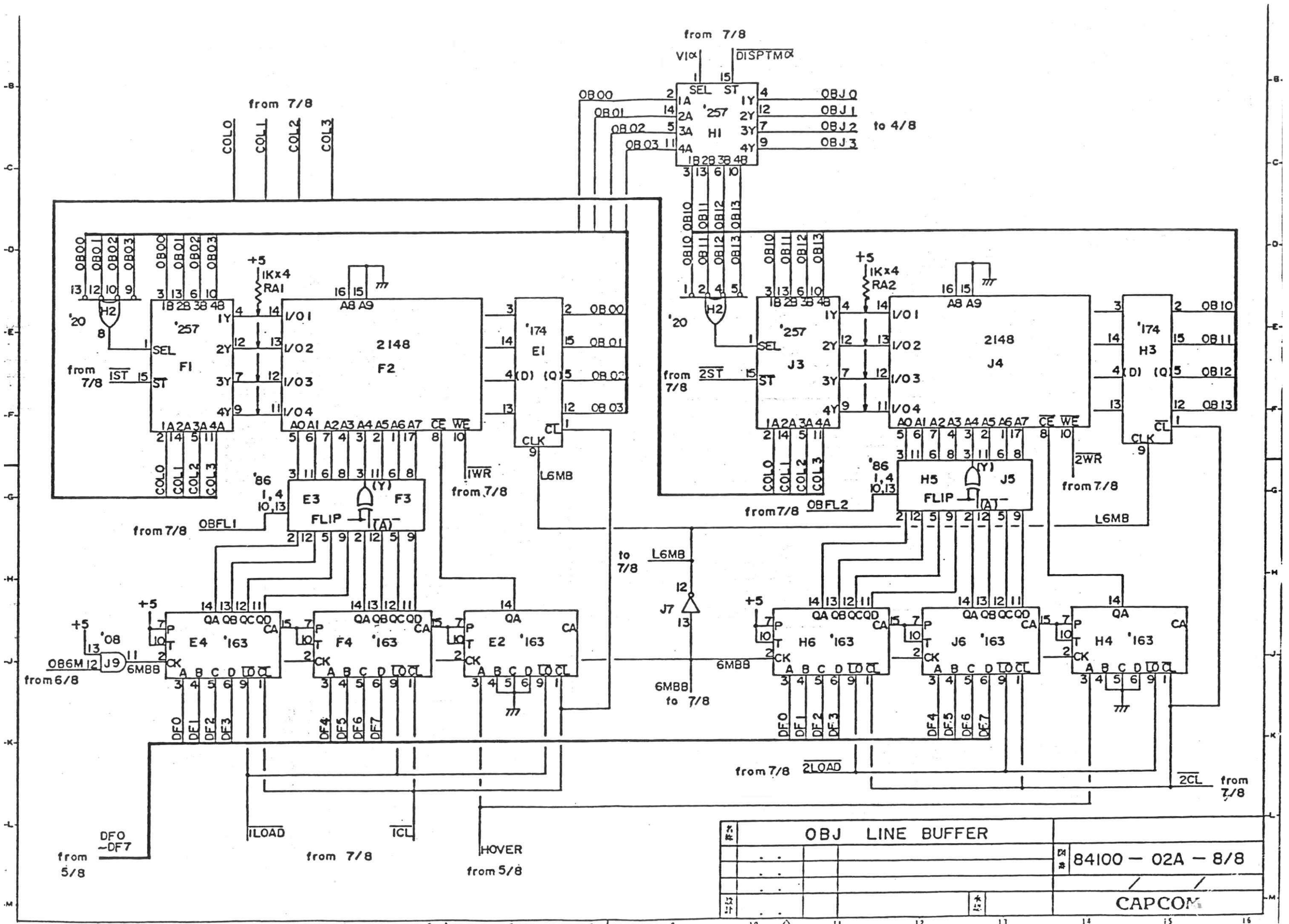
from 7/8
VIα
DISPTMα
SEL
ST
'257
H1
OBJ0
OBJ1
OBJ2
OBJ3
to 4/8
COL0
COL1
COL2
COL3
OB00
OB01
OB02
OB03
OB10
OB11
OB12
OB13
+5
1Kx4
RA1
RA2
'20
H2
F1
F2
J3
J4
2148
A8 A9
'174
E1
H3
CLK
CL
L6MB
1WR
2WR
'86
E3
F3
H5
J5
FLIP
OBFL1
OBFL2
J7
6MB8
to 7/8
'08
J9
086M
from 6/8
E4
F4
E2
H6
J6
H4
'163
DF0
DF1
DF2
DF3
DF4
DF5
DF6
DF7
1LOAD
1CL
HOVER
from 5/8
2LOAD
2CL
OBJ LINE BUFFER
84100 — 02A — 8/8
CAPCOM