TM-280
1st printing

Operators manual with illustrated parts lists

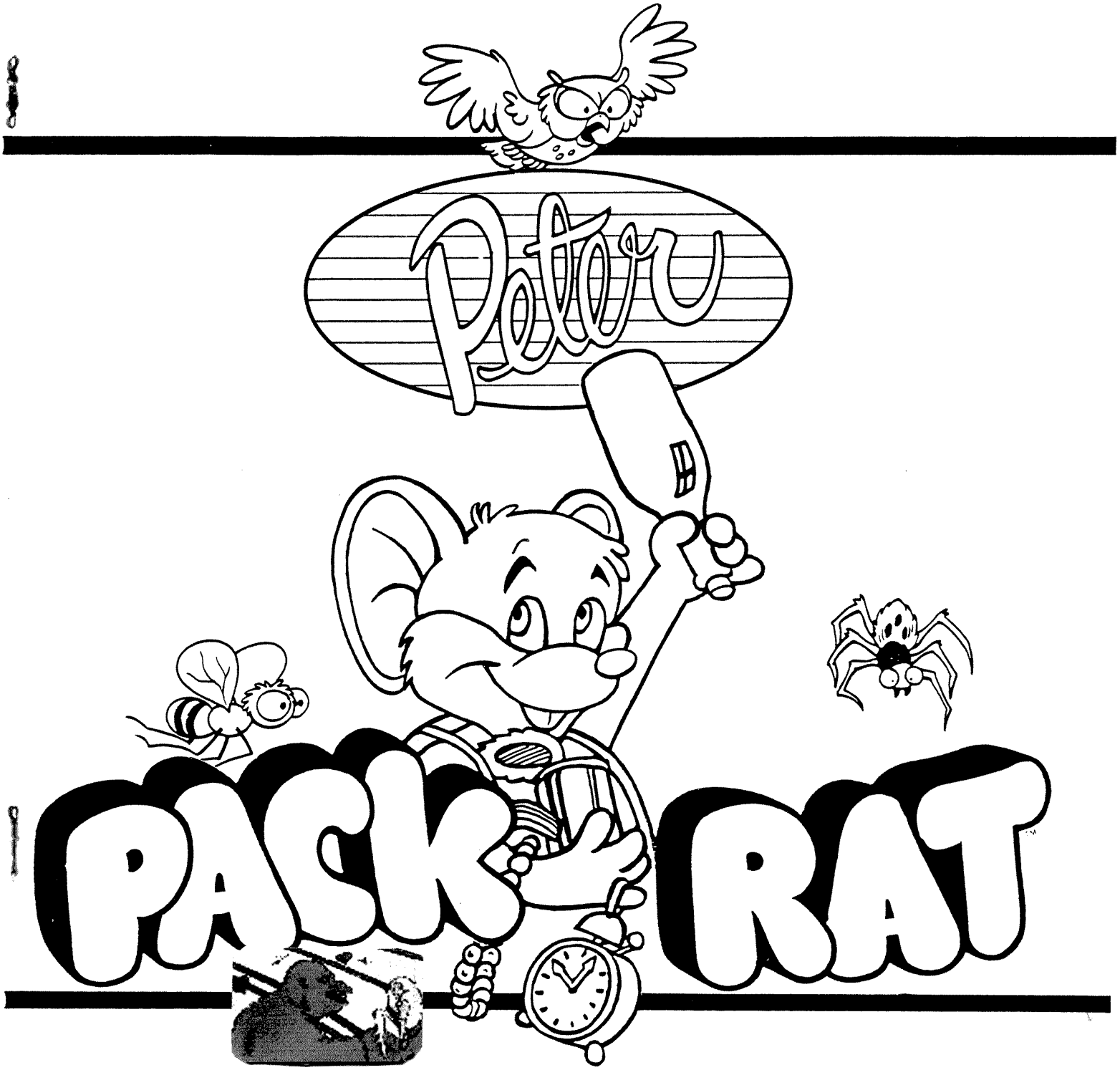

Atari Games Corporation Customer Service

If reading through this manual does not lead to solving a certain maintenance problem, call TELEHELP® at one of these Atari Games Customer Service offices:

UNITED STATES

Parts and Service
Atari Games Corporation
California Customer Service Office
737 Sycamore Drive
P.O. Box 906
Milpitas, CA 95035
Telex 17-2976
(Monday–Friday, 7:30–4:00 pm Pacific Time)
☎ **(408) 434-3950**

EUROPE

Parts and Service
Atari Games Corporation
European Customer Service Office
Tipperary Town, Ireland
Telex 28165
(Monday–Friday, 9:00–6:00 pm GMT)
☎ **062-52155**

© 1985 by Atari Games Corporation All rights reserved.

No part of this publication may be reproduced by any mechanical, photographic, or electronic process, or in the form of a phonographic recording, nor may it be stored in a retrieval system, transmitted, or otherwise copied for public or private use, without permission from the publisher.

The game play, all graphic designs, this technical manual, its accompanying schematic diagrams, and the display manual are protected by the U.S. Copyright Act of 1976.

This Act provides for increased penalties for violating federal copyright laws. Courts *can impound* infringing articles while legal action is pending. If infringers are convicted, courts can *order destruction* of the infringing articles.

In addition, the Act provides for payment of statutory damages of up to $250,000 in certain cases. Infringers may also have to pay costs and attorneys' fees and face an imprisonment of up to five years.

Atari Games Corporation will aggressively enforce its copyrights against any infringers. *We will use all legal means* to immediately halt any manufacture, distribution, or operation of a copy of video games made by us. Anyone who purchases such copies risks forfeiting such a game.

Published by: Atari Games Corporation
1272 Borregas Avenue
P.O. Box 3618
Sunnyvale, California 94088

Printed in the U.S.A. **5P**

Notice Regarding Non-ATARI Parts

⚠ WARNING ⚠

Use of non-ATARI® parts or modifications of any ATARI game circuitry may adversely affect the safety of your game, and may cause injury to you and your players.

You may void the game warranty (printed on the inside back cover of this manual) if you do any of the following:

- Substitute non-ATARI parts in the game.
- Modify or alter any circuits in the game by using kits or parts *not* supplied by Atari Games Corporation.

NOTE

This equipment generates, uses, and can radiate radio frequency energy and if not installed and used in accordance with the instruction manual, may cause interference to radio communications. It has been tested and found to comply with the limits for a Class A computing device pursuant to Subpart J of Part 15 of Federal Communications Commission (FCC) Rules, which are designed to provide reasonable protection against such interference when operated in a commercial environment. Operation of this equipment in a residential area or modification to this equipment is likely to cause interference in which case the user, at his own expense, will be required to take whatever measures may be required to correct the interference. If you suspect interference from an ATARI® game at your location, check the following:

- All green ground wires in the game are properly connected as shown in the game wiring diagram.
- The power cord is properly plugged into a grounded three-wire outlet.
- The game printed-circuit boards (PCB) are properly installed with the Electromagnetic Interference (EMI) ground plane.

If you are still unable to solve the interference problem, please contact Customer Service at Atari Games Corporation. See the inside front cover of this manual for service in your area.

Table of Contents

1 Installation

How to Use This Manual 1-1
Introduction 1-2
Kit Parts Inventory 1-2
Tools Required 1-2
Conversion Instructions 1-2
Setting the Coin and Game Options 1-6
Operator Hints 1-6

2 Self-Test

RAM/ROM Test 2-2
Switch Test 2-2
Coin Options 2-2
Game Options 2-3
Statistics 2-4
Histograms 2-4
Playfield Test 2-4
Motion Object Test 2-5
Motion Object Picture Test 2-5
Motion Object Obscuring Test 2-5
Motion Object Height Test 2-5
Alphanumerics Test 2-5
Color Test 2-6
Color Purity Test 2-6
Convergence Test 2-6
Sound Test 2-7
Joystick Test 2-7

3 Maintenance

Preventive Maintenance 3-2
Removing the Control Panel 3-2
Joystick Control 3-3

Corrective Maintenance 3-3
Removing the Player Start Switches 3-4
Removing the Joystick Assembly 3-6
Disassembling the Joystick Assembly 3-6

4 Game Play

Introduction 4-1
Attract Mode 4-2
High Score Mode 4-2
Hints for Game Play 4-3
Maximizing Earnings 4-3

5 Illustrated Parts Lists

See List of Illustrations that follows.

List of Illustrations

Figure 1-1	Conversion Kit Part Locations	1-2
Figure 1-2	Attraction Film Replacement	1-4
Figure 1-3	Control Panel Replacement	1-4
Figure 1-4	Cartridge PCB Replacement	1-5
Figure 2-1	ROM Test Fails	2-2
Figure 2-2	RAM Test Fails	2-2
Figure 2-3	Switch Test	2-2
Figure 2-4	Coin Options	2-3
Figure 2-5	Game Options	2-3
Figure 2-6	Statistics	2-4
Figure 2-7	Histograms	2-4
Figure 2-8	Playfield Test	2-4
Figure 2-9	Motion Object Test	2-5
Figure 2-10	Motion Object Picture Test	2-5
Figure 2-11	Motion Object Obscuring Test	2-5
Figure 2-12	Motion Object Height Test	2-6
Figure 2-13	Alphanumerics Test	2-6
Figure 2-14	Color Test	2-6
Figure 2-15	Color Purity Test	2-6
Figure 2-16	Convergence Test	2-7
Figure 2-17	Sound Test	2-7
Figure 2-18	Joystick Test	2-7
Figure 3-1	Control Panel Removal	3-2
Figure 3-2	Removing the Joystick Assembly and Start Switches	3-4
Figure 3-3	Joystick Disassembly and Lubrication	3-5
Figure 5-1	Control Panel Assembly	5-2
Figure 5-2	Joystick Assembly	5-4
Figure 5-3	LSI Cartridge PCB Assembly	5-6

List of Tables

Table 1-1	Kit Parts Inventory	1-3
Table 2-1	Faulty ROM Locations	2-2
Table 2-2	Coin Option Settings	2-3
Table 2-3	Game Option Settings	2-3

Safety Summary

The following safety precautions apply to all game operators and service personnel. Specific warnings and cautions will be found throughout this manual where they apply.

⚠ WARNING ⚠

Properly Ground the Game. Players may receive an electrical shock if this game is not properly grounded! To avoid electrical shock, do not plug in the game until it has been inspected and properly grounded. This game should only be plugged into a grounded three-wire outlet. If you have only a two-wire outlet, we recommend you hire a licensed electrician to install a grounded outlet. Players may receive an electrical shock if the control panel is not properly grounded! After servicing any parts on the control panel, check that the grounding clip is firmly secured to the metal tab on the inside of the control panel. Only then should you lock up the game.

AC Power Connection. Before connecting the game to the AC power source, verify that the proper voltage-selection plug is installed on the game's power supply.

Disconnect Power During Repairs. To avoid electrical shock, disconnect the game from the AC power source before removing or repairing any part of the game. When removing or repairing the video display, extra precautions must be taken to avoid electical shock because high voltages may exist within the display circuitry and cathode-ray tube (CRT) even after power has been disconnected. Do not touch internal parts of the display with your hands or with metal objects! Always discharge the high voltage from the CRT before servicing this area of the game. To discharge the CRT: Attach one end of a large, well-insulated, 18-gauge jumper wire to ground. Momentarily touch the free end of the grounded jumper to the CRT anode by sliding it under the anode cap. Wait two minutes and discharge the anode again.

Use Only ATARI Parts. To maintain the safety integrity of your ATARI game, do not use non-ATARI parts when repairing the game. Use of non-ATARI parts or other modifications to the game circuitry may adversely affect the safety of your game, and injure you or your players.

Handle Fluorescent Tube and CRT With Care. If you drop a fluorescent tube or CRT and it breaks, it may implode! Shattered glass can fly six feet or more from the implosion.

Use the Proper Fuses. To avoid electrical shock, use replacement fuses which are specified in the parts list for this game. Replacement fuses must match those replaced in fuse type, voltage rating, and current rating. In addition, the fuse cover must be in place during game operation.

CAUTION

Properly Attach All Connectors. Make sure that the connectors on each printed-circuit board (PCB) are properly plugged in. Note that they are keyed to fit only one way. If they do not slip on easily, do not force them. A reversed connector may damage your game and void the warranty.

Ensure the Proper AC Line Frequency. Video games manufactured for operation on 60 Hz line power (i.e., United States) must not be operated in countries with 50 Hz line power (i.e., Europe). The fluorescent light ballast transformer will overheat, causing a potential fire hazard if 60 Hz games are operated on power lines using 50 Hz. Check the product identification label of your game for the line frequency required.

Installation

How to Use This Manual

This manual is written for game operators and service technicians and describes how to install, test, and maintain your PETER PACK RAT™ game.

Your PETER PACK RAT game uses the Atari Games System I™ cabinet, which is designed to accept the necessary hardware to easily convert the System I cabinet into a variety of games. Consequently, this manual contains information that applies to those parts of your existing System I cabinet that are added or replaced to convert the cabinet for the PETER PACK RAT game (see Figure 1-1). Information that applies to those parts of the System I cabinet that are common to all games is contained in a separate System I operators manual (TM-277), included with your first System I cabinet. Where applicable, references are provided in this manual to the System I operators manual.

This manual contains the following information on the PETER PACK RAT game.

- Chapter 1 provides a kit parts inventory, conversion instructions, inspection procedures, and option setting information.
- Chapter 2 provides self-test procedures (includes procedures for setting the coin and game options).
- Chapter 3 provides maintenance information for the Joystick Assembly and the player-start pushbutton switches.
- Chapter 4 provides game play information.
- Chapter 5 provides illustrated parts lists for the PETER PACK RAT Cartridge Printed-Circuit Board (PCB), control-panel assembly, and Joystick Assembly.

Wiring and schematic diagrams for the PETER PACK RAT control panel and Cartridge PCB are contained in the SP-280 Schematic Package Supplement included with this manual. Refer to the Schematic Package Supplement included with the *System I Operators Manual* for the wiring and schematic diagrams that apply to the System I cabinet hardware.

Chapter 1

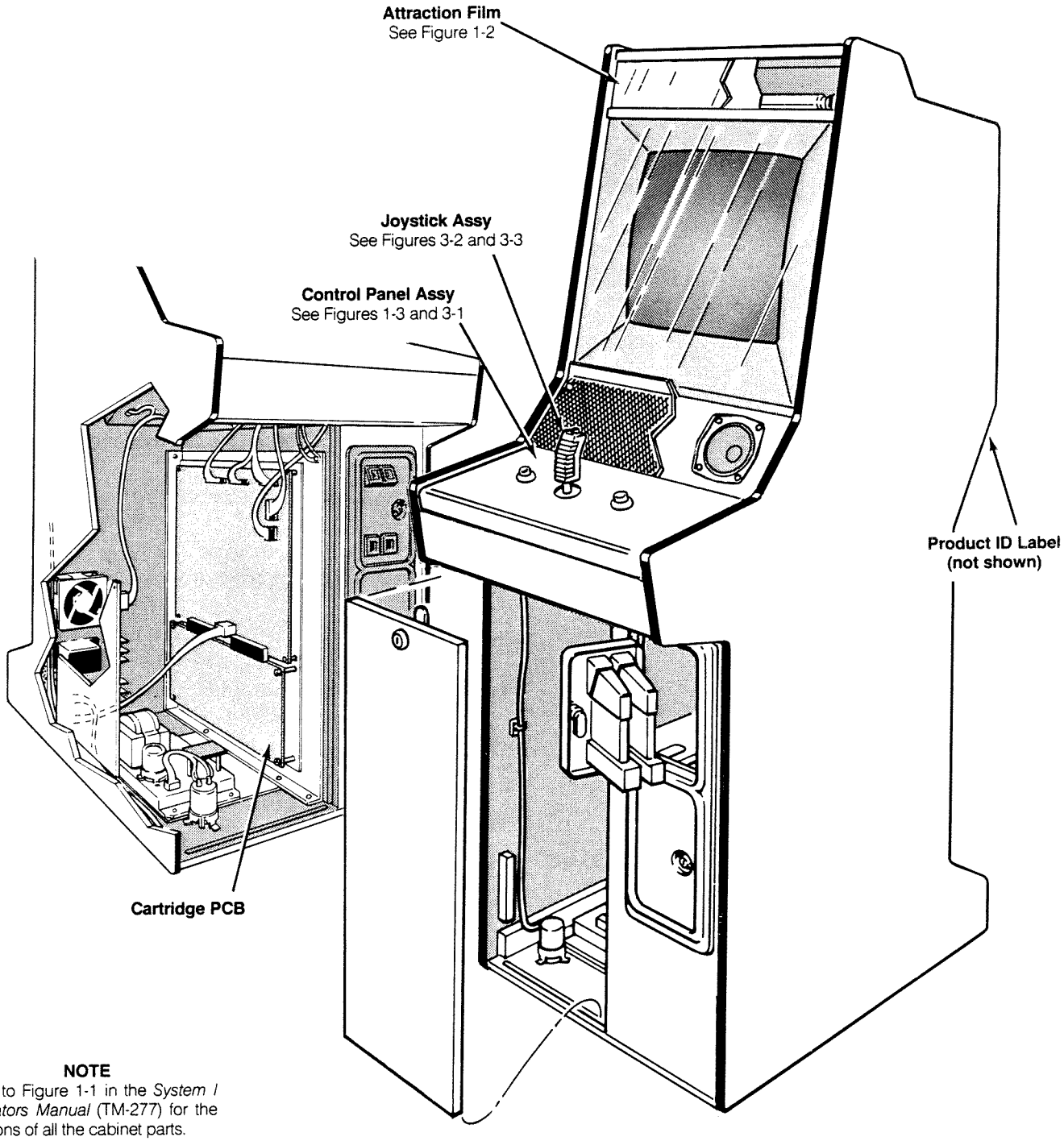

NOTE
Refer to Figure 1-1 in the *System I Operators Manual* (TM-277) for the locations of all the cabinet parts.

Figure 1-1 Conversion Kit Part Locations

Introduction

This chapter includes the instructions necessary for converting your existing System I game into a PETER PACK RAT game. The conversion instructions include: (1) removing the existing attraction film, control panel, and Cartridge Printed-Circuit Board (PCB); and (2) installing a PETER PACK RAT attraction film, Cartridge PCB, and control panel. Refer to Figure 1-1 for the locations of the parts of the System I cabinet that are replaced.

Kit Parts Inventory

The assemblies listed in Table 1-1 are included in the PETER PACK RAT Conversion Kit. Refer to Chapter 5, Illustrated Parts Lists, for a description of the component parts comprising the control panel and Cartridge PCB assemblies listed in Table 1-1.

Tools Required

The only tools required to perform a complete PETER PACK RAT conversion are a Phillips screwdriver and a 1/8-inch hex driver.

Conversion Instructions

⚠ WARNING ⚠

To avoid electrical shock, unplug the game before performing the conversion procedures.

Table 1-1 Kit Parts Inventory A043199-01

Part No.	Quantity	Description
A042876-01	1	Control Panel Assembly
A043188-03	1	Cartridge PCB Assembly
038158-01	1	Product Identification Label (without UL logo)
		OR
038158-02	1	Product Identification Label (with UL logo)
042928-01	1	Attraction Film
SP-280	1	PETER PACK RAT Schematic Package Supplement
ST-280	1	Self-Test Label
TM-280	1	PETER PACK RAT Operators Manual

NOTE

The following conversion should be performed by qualified service personnel.

The following procedures are arranged in the sequence recommended for performing the game conversion. The parts of your cabinet that are affected by the conversion are removed first and then replaced by the new PETER PACK RAT kit parts.

Replace the Attraction Film

Perform the following procedure to remove/replace the existing attraction film with the PETER PACK RAT attraction film (see Figure 1-2).

1. Turn off the game power.
2. Use a 1/8-inch hex driver to remove the three screws and washers securing the upper retainer to the top of the cabinet.
3. Grasp the top edge of the existing attraction film behind the attraction shield and slide it up to remove.
4. Install the PETER PACK RAT attraction film. Make sure the film is fully inserted into the bottom slot.
5. Replace the upper retainer.

Replace the Control Panel

Perform the following procedure to remove/replace the existing control panel with the PETER PACK RAT control panel (see Figure 1-3).

1. Unlock and open the coin door on the front of the cabinet.
2. Carefully reach through the coin door opening and release the spring-draw latch located under the control panel on the right side of the cabinet.
3. Unlock and remove the front-access panel.
4. Reach through the front access-panel opening and disconnect the control-panel harness from the top of the Main PCB.
5. Carefully reach up under the top of the front-access panel opening and release the spring-draw latch located under the control panel on the left side of the cabinet.
6. From underneath, push up on the front edge of the control panel to free the panel from the slot in the cabinet.
7. Disconnect the green ground wire from the control-panel harness and remove the control panel from the cabinet.
8. Install the PETER PACK RAT control panel in the reverse order of removal. Refer to Figure 3-1 for the

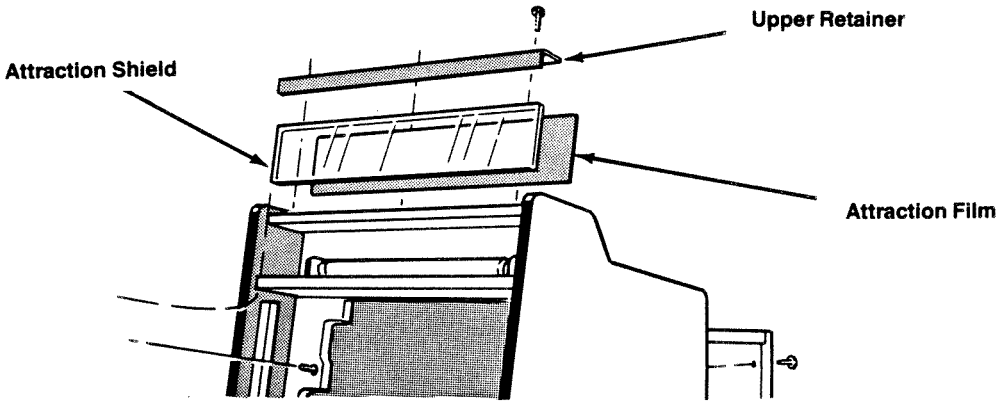

Figure 1-2 Attraction Film Replacement

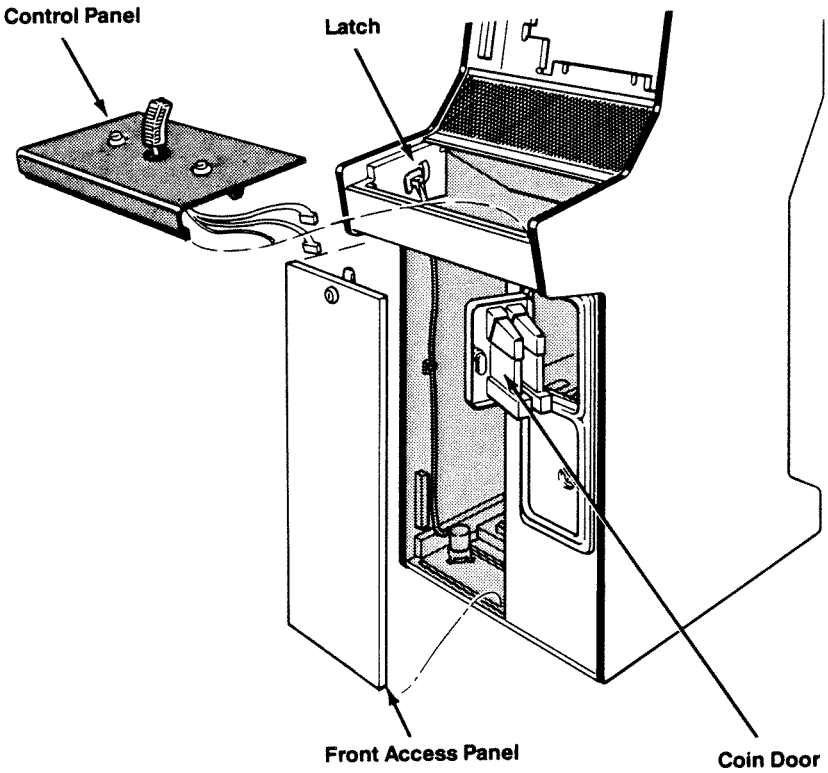

Figure 1-3 Control Panel Replacement

proper control-panel harness connections to the Main PCB. Make sure the green ground wire is connected to the control-panel harness.

Replace the Cartridge PCB

Perform the following procedure to remove/replace the existing game Cartridge PCB and replace with the PETER PACK RAT Cartridge PCB (see Figure 1-4).

1. Turn the cabinet power off.
2. Unlock and remove the front-access panel from the cabinet.
3. Turn the four thumbscrews (some System I games may have Phillips screws) that secure the existing Cartridge PCB to the ground plane.
4. Gently disconnect the Cartridge PCB from the Main PCB.

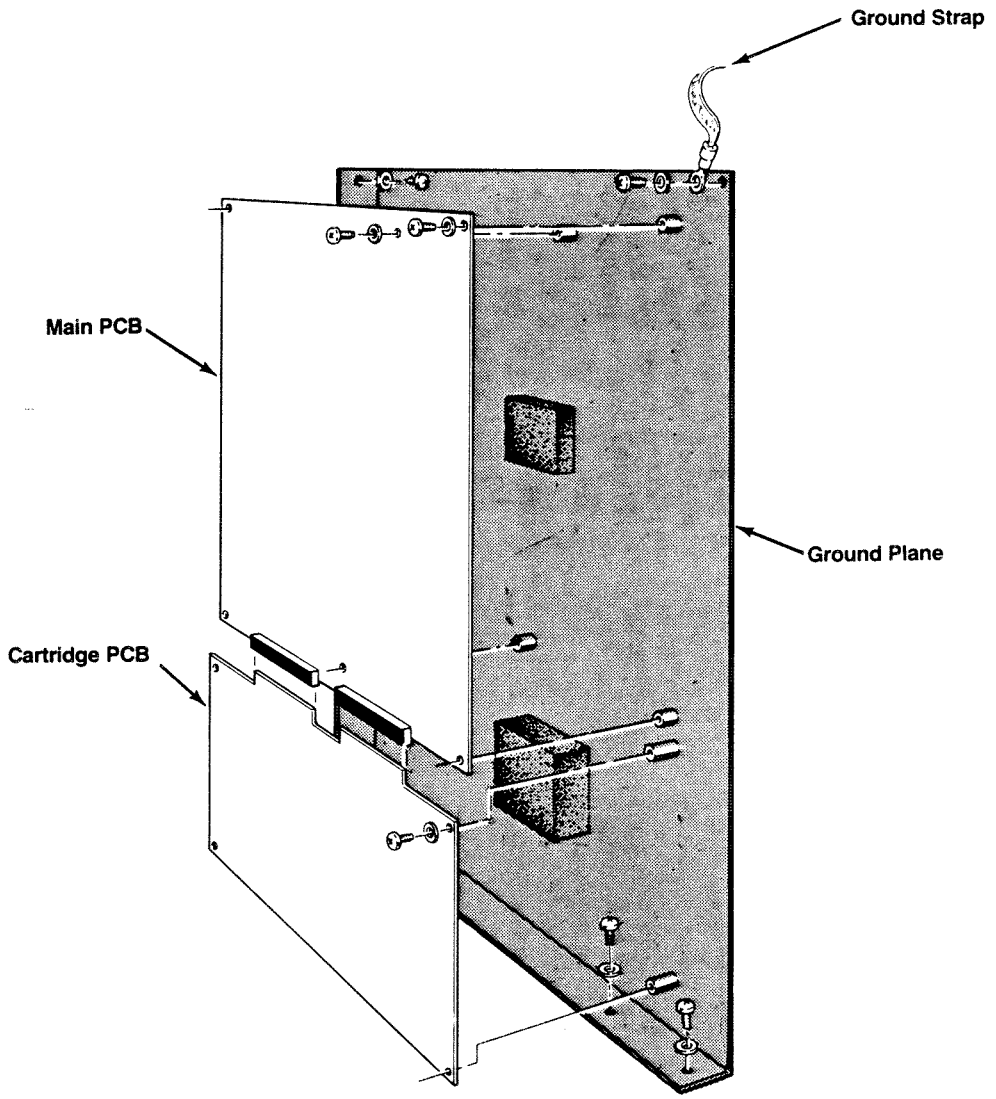

Figure 1-4 Cartridge PCB Replacement

5. Connect the PETER PACK RAT Cartridge PCB to the Main PCB. Make sure that the Cartridge PCB is fully inserted into the Main PCB edge connectors.
6. Replace the four thumbscrews on the Cartridge PCB. Refer to Figure 1-4 for the locations of the printed-circuit boards.

> **NOTE**
> The procedure for removing the Main PCB is included in the Maintenance chapter of the *System I Operators Manual.*

Install the Self-Test Label

Staple or tape the PETER PACK RAT self-test label on the inside of the front access panel.

Install the Product Identification Label

Perform the following procedure to install the PETER PACK RAT product identification label.

1. Remove the protective backing from the PETER PACK RAT product identification label.
2. Place the PETER PACK RAT product identification label over the existing product identification label on the back of the cabinet.

Inspect the Game

Before applying power, perform the following inspection procedure.

1. Carefully check that the PETER PACK RAT conversion kit parts have been properly installed. Make sure the control-panel harness connectors are tightly connected and that the spring-draw latches under the control panel are securely fastened.
2. Set the self-test switch to the on position. Plug in the game power cord; then turn on the power on/off switch.
3. Perform the self-test procedure as given in Chapter 2 of this manual. If the self-test indicates that the display requires adjustment, perform the adjustment procedures described in the display manual.
4. When you are confident that all instructions were properly followed, close and lock the front-access panel.

Setting the Coin and Game Options

The PETER PACK RAT coin and game options are set in the Self-Test Mode. Refer to the options display described in Chapter 2 for the recommended settings and the procedure for setting the options.

Operator Hints

Your System I cabinet with the PETER PACK RAT game uses more effective audio than previous games, which results in more player involvement and enjoyment. The System I games use advanced, digital, sound-generation techniques to create realistic musical instrument sounds (such as clarinets, harmonicas, drums, and violins). Although a player may not be consciously aware of the music, it has a direct effect on the excitement and emotional experience of the game.

The PETER PACK RAT game creates ear-catching sound effects, which are designed to give feedback to make the player believe that the game is responding directly to his actions. To maximize the player's enjoyment of this enhanced audio, we are providing some hints for the operator:

1. The game location should be a relatively dead acoustical environment. The goal is to minimize unnecessary sound reflection, so that the sounds from the PETER PACK RAT game won't be drowned out by the accumulation of other sounds that bounce around the room. Carpets help eliminate sound reflections from the floor. Acoustical tile is also useful, especially if you have low ceilings.
2. If you use an environmental sound system or a stereo, consider lowering its volume or perhaps even turning it off. In the days when video games just made harsh beeps and boops, a central sound system helped make up for the lack of drive and excitement in a game's sounds. But your PETER PACK RAT game is very musical, and a sound system interferes with the game's ability to interest players and draw bystanders.
3. Be concerned with the overall volume levels in arcade environments. The goal is to involve the players' emotions, not to damage their hearing. To a certain point, raising the game volume helps add to player excitement, but above that level it creates hearing fatigue and the high volume starts to drive players away. Rather than turning up the volume on the PETER PACK RAT games to cut through the background sound level, try lowering the volume of any neighboring games that have sounds which are not an attractive or important element. Careful placement of games and attention to unnecessary noise sources can also help increase the player's sense of game involvement and interaction.

Self-Test

After the self-test switch is set to the on position, 16 self-test screens provide a visual and audible check of the Pack Rat game circuits. Refer to Chapter 1 in the System I Operators Manual (TM-275) for the location of the self-test switch.

When the self-test switch is turned on, and the power is then turned on, the game enters the full Self-Test Mode. If the self-test switch is turned on any other time, then the game will enter a shorter Self-Test Mode. The following self-test screens are arranged in the sequence in which they occur after the self-test switch is first turned on. After the Joystick Test, the sequence starts over with the Switch Test. Turning the self-test switch off at any time during the Self-Test Mode causes the game to return to the Attract Mode.

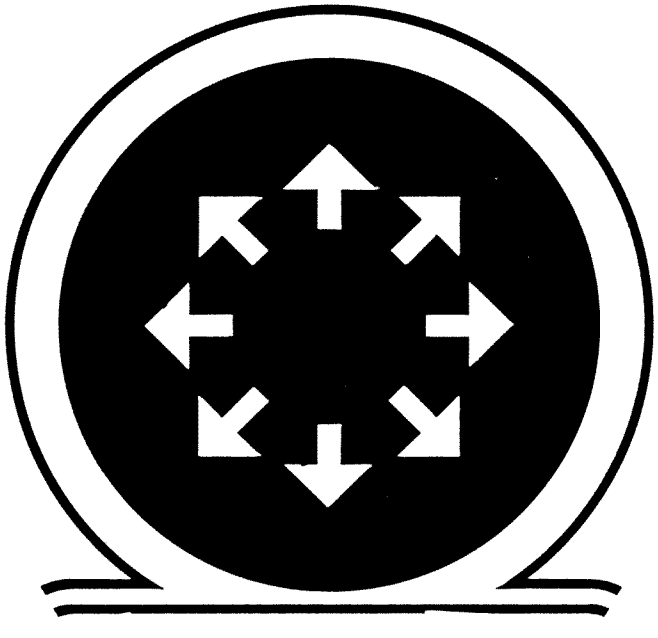

Chapter 2

RAM/ROM Test

The RAM/ROM Test, as shown in Figures 2-1 and 2-2, provides a visual check of the game RAM, ROM, and associated circuitry. If the RAM and ROM test passes, the display will show the Switch Test.

The RAM/ROM Test is divided into two sections. The condition of the RAM circuitry is displayed in the bottom half of the screen and, after about an eight-second delay, the condition of the ROM circuitry is displayed in the top half of the screen. An error message indicates that the RAM, ROM, or associated circuitry may be faulty.

If the ROM test fails, the error messages may appear in the top half of the screen as shown in Figure 2-1. Refer to Table 2-1 for the faulty ROM locations.

If the upper or lower main memory ROM circuits on the Main PCB fail, an *Upper or Lower Main ROM Error* message will appear at the top of the screen. Press the player 1 start button to obtain any RAM or ROM error message(s) from the Cartridge PCB RAM or ROM circuits. Press the player 1 start button again. If the bank switch ROM circuits on the Cartridge PCB are faulty, the message *Bank Switch Error* will appear.

If the RAM test fails, the error messages appear as shown in Figure 2-2. Refer to the memory maps and schematic diagrams in the schematic package supplements for this manual and for the System I Operators Manual to determine the location of the faulty RAM circuit.

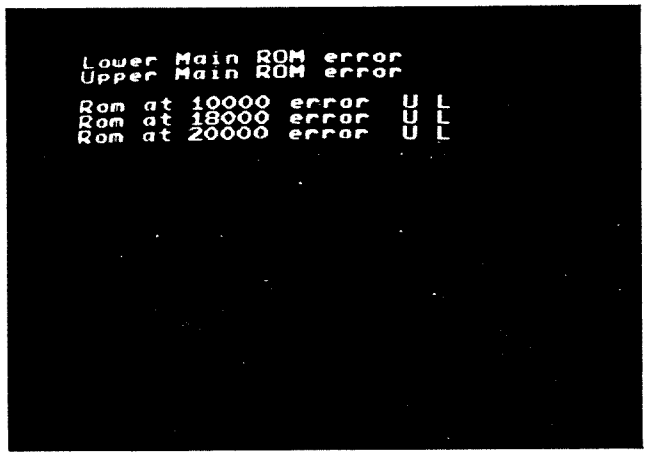

Figure 2-1 ROM Test Fails

Table 2-1 Faulty ROM Locations

Error Message	Location
ROM at 10000 error	U = 10B L = 10A
ROM at 18000 error	U = 11B L = 11A
ROM at 20000 error	U = 12B L = 12A

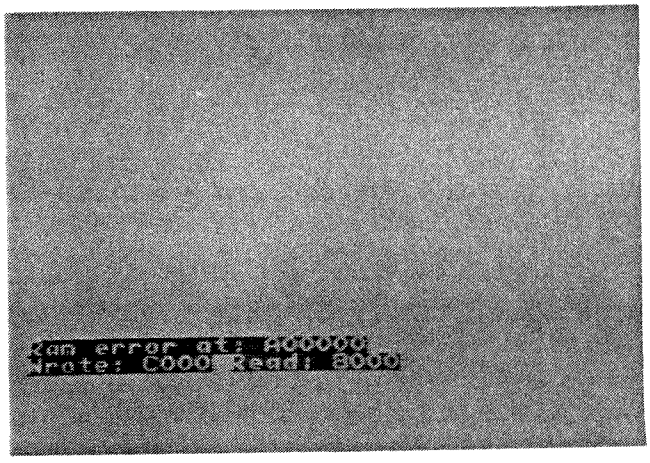

Figure 2-2 RAM Test Fails

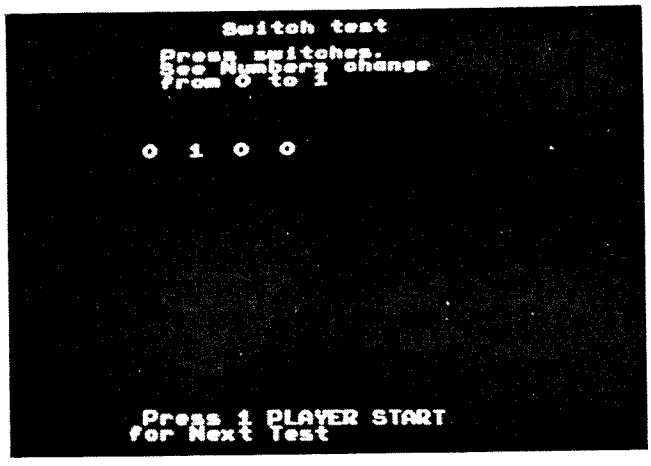

Figure 2-3 Switch Test

Repair the faulty RAM or ROM circuit or press the player 1 start button to obtain the Switch Test.

Switch Test

The Switch Test appears as shown in Figure 2-3. This test indicates the condition of the player 2 start pushbutton switch. Press the player 2 start button and note that the first number changes to a 1. Press the button on the joystick and note that the second number changes from a 0 to a 1. Press the player 1 start button to obtain the next screen.

Coin Options

The Coin Options screen appears as shown in Figure 2-4. This screen indicates the current coin-option settings and is used to change the coin option settings. Refer to Table 2-2 for the available and recommended settings.

Coin Mode should have a red box around it. Move the joystick right or left, and note that the coin mode values

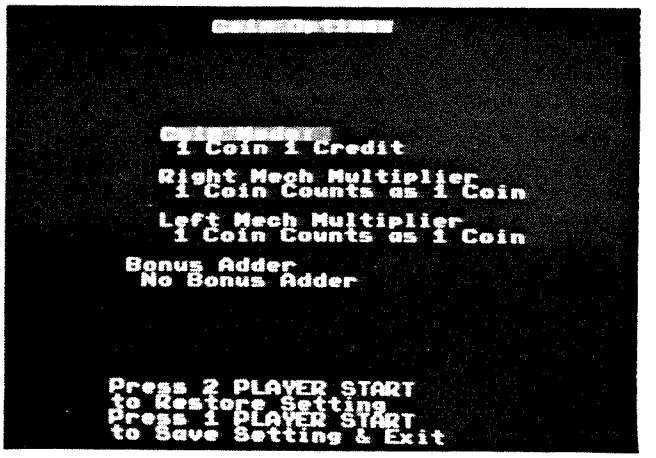

Figure 2-4 Coin Options

Table 2-2 Coin Option Settings

Credit Mode	1 Coin 1 Credit ◄ 2 Coins 1 Credit 3 Coins 1 Credit 4 Coins 1 Credit
Right Mech Multiplier	1 Coin Counts as 1 Coin ◄ 1 Coin Counts as 4 Coins 1 Coin Counts as 5 Coins 1 Coin Counts as 6 Coins
Left Mech Multiplier	1 Coin Counts as 1 Coin ◄ 1 Coin Counts as 2 Coins
Bonus Adder	No Bonus Adder ◄ 2 Coins Give 1 Extra Coin 4 Coins Give 1 Extra Coin 4 Coins Give 2 Extra Coins 5 Coins Give 1 Extra Coin 3 Coins Give 1 Extra Coin Free Play

◄ *Manufacturer's recommended settings.*

change. Select the desired value. Move the joystick down to move the red box to *Right Mech Multiplier*. Move the joystick right or left to cycle through all the available multiplier values. Select the desired value. Repeat this procedure for the remaining options.

If you wish to cancel the option changes and restore the original settings, press the player 2 start button.

Press the player 1 start button to set the game for the options selected and obtain the Game Options screen.

Game Options

The Game Options screen appears as shown in Figure 2-5. This screen indicates the current option settings; use this screen to reset the high-score table and change the game option settings. Refer to Table 2-3 for the available options and the recommended settings. Note that the recommended settings are displayed in green.

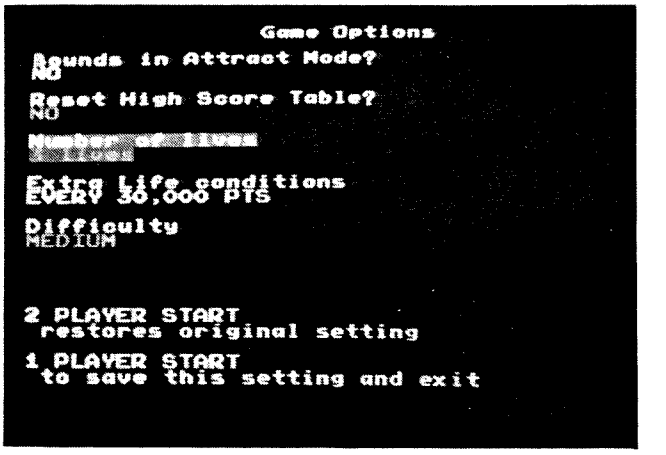

Figure 2-5 Game Options

Table 2-3 Game Option Settings

Option Name	Available Settings
Game Difficulty	Easy Medium ◄ Hard Harder
Player Continuation	Allowed ◄ Not Allowed
Sounds in Attract Mode?	Yes ◄ No
Reset High-Score Table?*	Yes No ◄
Number of Starting Lives	2 3 ◄ 4 5
Extra Life Conditions	None 20,000 points ◄ 25,000 points 30,000 points 35,000 points

◄ *Manufacturer's recommended settings.*

**High score table option will always return to the default setting ("NO") after the high score table is cleared.*

Move the joystick right or left and note that the settings for the option in the shaded block will change. Select the desired value. Move the joystick up or down to move the desired option into the shaded block. Move the joystick right or left to cycle through all the available option settings. Select the desired value. Repeat this procedure for the remaining options.

If you wish to cancel the option changes and restore the original settings, press the player 2 start button.

Press the player 1 start button to set the game for the options selected and obtain the Statistics screen.

Statistics

The Statistics screen appears as shown in Figure 2-6. This screen provides a visual check of the current game statistics. The statistics information is accumulated either from the first time the game was turned on or from the last time the statistics were reset. Reset the statistics information by pressing the player 2 start button.

The following information appears on the Statistics screen:

- *Aux Coins* is not used on the Peter Pack Rat game.
- *Left coins* shows the number of coins deposited in the left coin mechanism.
- *Right coins* shows the number of coins deposited in the right coin mechanism.
- *1 plyr Games* shows the number of 1 player games.
- *2 plyr Games* shows the number of 2 player games.
- *Mins played* shows the total time, in minutes, of all the games played.
- *Mins pwr up* shows the total time, in minutes, that the game has been turned on.
- *Aux. cntr 1* shows the largest number of extra lives earned in any single game played.
- *Aux. cntr 2* shows the total number of extra lives earned in all games played.
- *Aux. cntr 3* shows the number of continued games played.
- *Error count* shows the number of EEPROM errors that were detected. Replace the EEPROM at location 15F on the Main PCB if the errors detected exceed approximately 75 per week.
- *Avg. Game Time* shows the average game time per play in *seconds*.

Press the player 1 start button to obtain the Histogram Screen.

Figure 2-6 Statistics

Histograms

There are four Histogram screens as shown in Figure 2-7. The Histogram shows game times for Difficulty Levels Easy, Medium, Hard, and Good Luck. The screens are selected by pressing the player 1 start button. These screens provide a visual check of the game times, in seconds, from 0 to 540 and up for 4 levels of game play. Also displayed is the high score for each level.

The game times information is accumulated either from the first time the game was turned on or from the last time the game times were reset. Reset the Histograms by pressing the player 2 start button while displaying the Histogram for Level 4 screen.

Press the player 1 start button to obtain the Playfield Test.

Playfield Test

The Playfield Test indicates the condition of some of the graphics ROM, the vertical and horizontal playfield scrolling registers, and the joystick control. The display (see Figure 2-8) should not show any abnormalities.

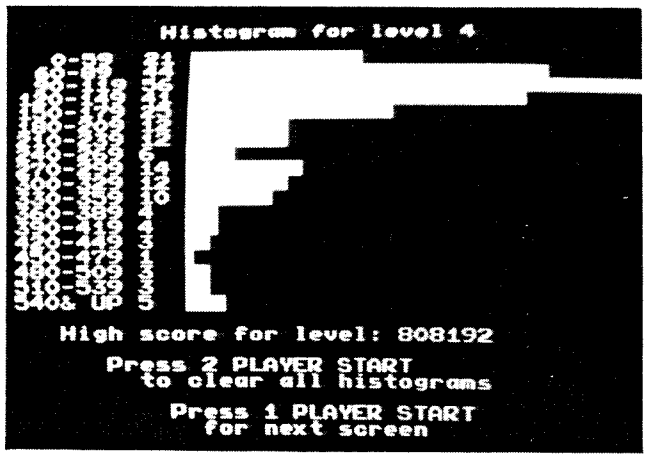

Figure 2-7 Histograms

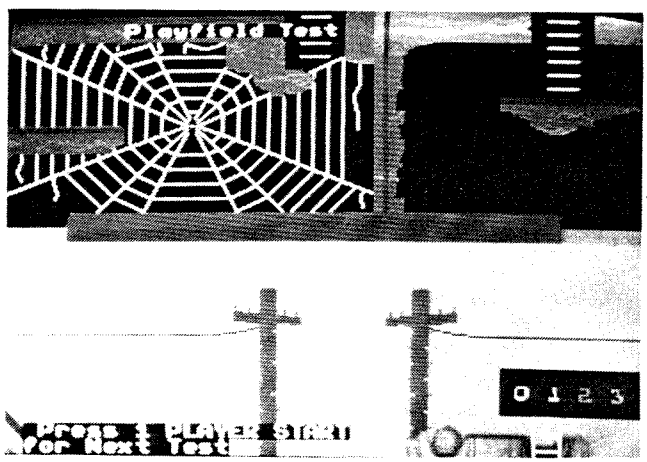

Figure 2-8 Playfield Test

Move the joystick control to the left. The playfield should slowly scroll to the left. Move the joystick control up and the playfield will scroll up—likewise for right and down.

The numbers in the center of the playfield display indicate the condition of the bit plane 0 through 3 circuits. The numbers should be four shades of gray, with the number *3* displayed as the lightest shade.

Press the player 1 start button to obtain the Motion Object Test.

Motion Object Test

The Motion Object Test appears as shown in Figure 2-9. This test indicates the condition of the motion-object buffer circuit. The seven groups of eight motion objects should be identical and eight pixels high.

Press the player 2 start button to select any of the 56 motion objects. If the joystick is moved, the selected motion object should move in the same direction.

Press the player 1 start button to obtain the Motion Object Picture Test.

Motion Object Picture Test

The Motion Object Picture Test appears as shown in Figure 2-10. By moving the Joystick right or left the pictures should change. By selecting all of the available pictures, you can see the state of the graphics ROMs.

Press the player 1 start button to obtain the next test.

Motion Object Obscuring Test

The Motion Object Obscuring Test appears as shown in Figure 2-11. The Motion Object Obscuring Test indicates the condition of the graphic priority control circuit. Move either joystick to move the motion object around the center of the display. The motion object should disappear and reappear around a large blank square.

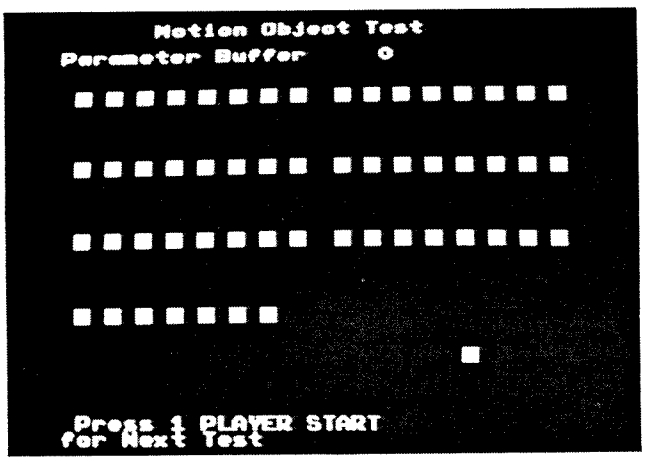

Figure 2-9 Motion Object Test

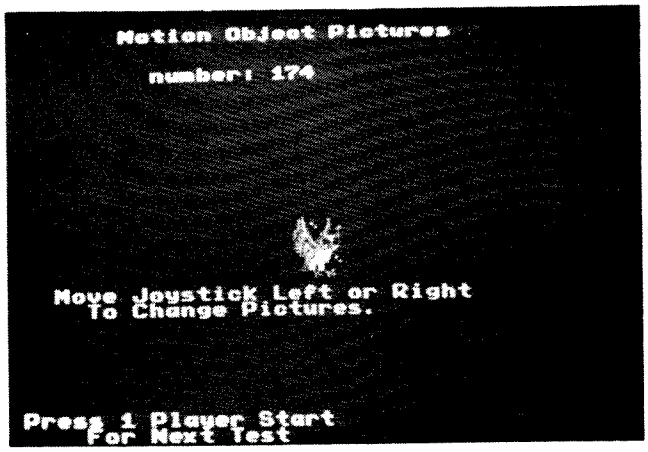

Figure 2-10 Motion Object Picture Test

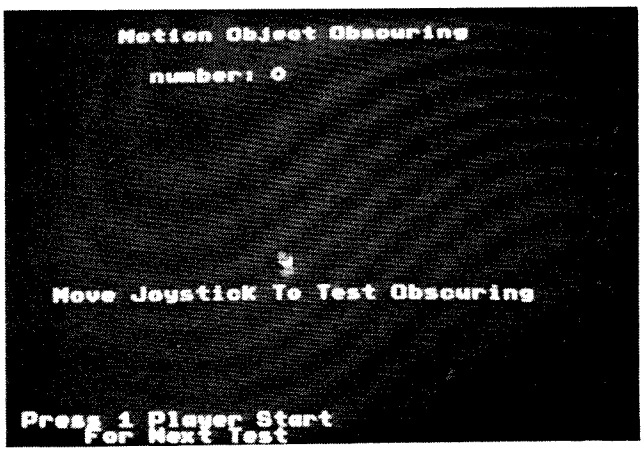

Figure 2-11 Motion Object Obscuring Test

Press the player 1 start button to obtain the Motion Object Height Test.

Motion Object Height Test

The Motion Object Height Test appears as shown in Figure 2-12. This test indicates the condition of the motion object/playfield graphic address generator circuit.

Each successive column of motion objects should be eight pixels taller than the last. The top eight pixels of all the columns should be the same. The top 16 pixels of all the columns that are at least 16 pixels high should be the same. Each column should add a new 8 × 8 pixel stamp picture to the bottom and slide the old picture up by eight pixels.

Press the player 1 start button to obtain the Alpha Test.

Alphanumerics Test

The Alphanumerics Test should appear as shown in Figure 2-13. This test indicates the condition of the alphanumerics circuit.

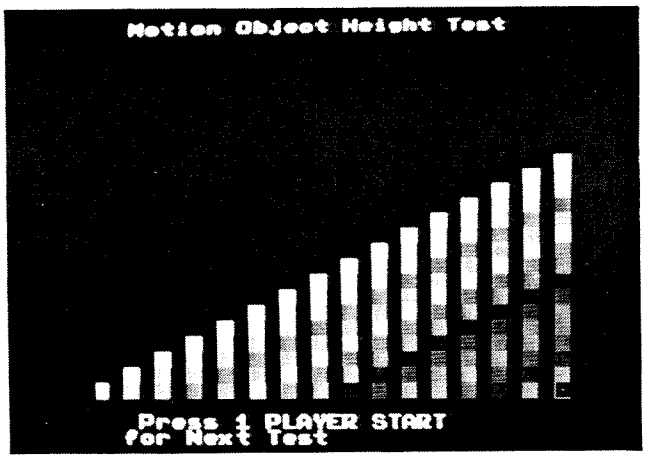

Figure 2-12 Motion Object Height Test

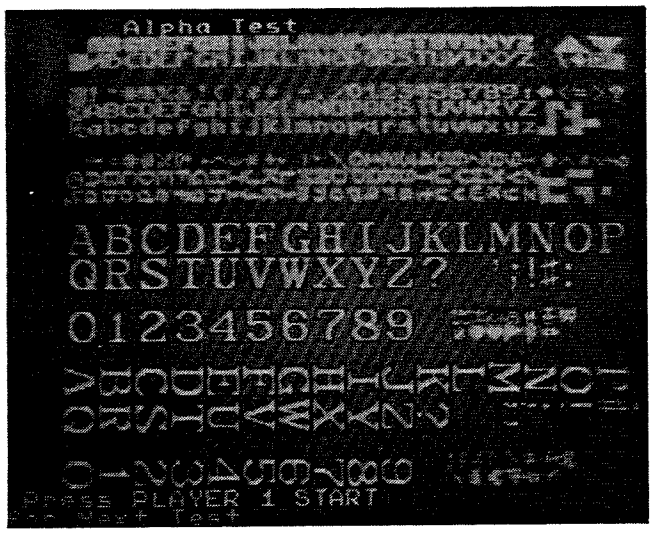

Figure 2-13 Alphanumerics Test

Press the player 1 start button to obtain the Color Test.

Color Test

The Color Test appears as shown in Figure 2-14. This test indicates the condition of the display color circuits.

There should be eight vertical gray-scale bars and three groups of eight horizontal bars with shades of red, green, and blue. The brightest bars should be on the left, and the darkest (black) bars should be on the right with a bright white frame around the screen. This frame will help to identify the darkest color band. If the display characteristics are not correct, refer to the display manual for the color-gun adjustment procedure or to determine the possible cause of failure.

Press the player 1 start button to obtain the Color Purity Test.

Color Purity Test

The Color Purity Test consists of five color displays that indicate the condition of the display color-purity circuits.

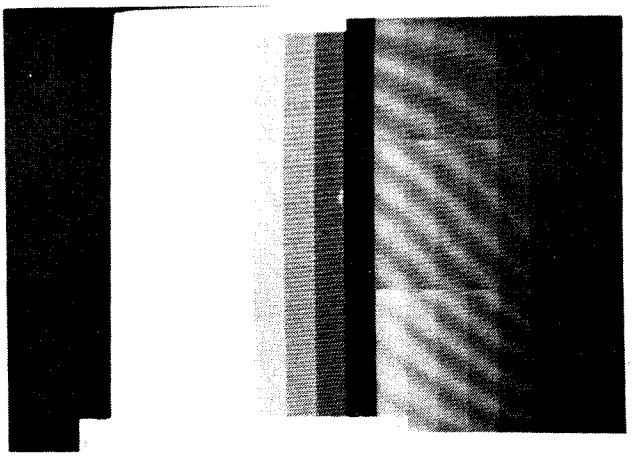

Figure 2-14 Color Test

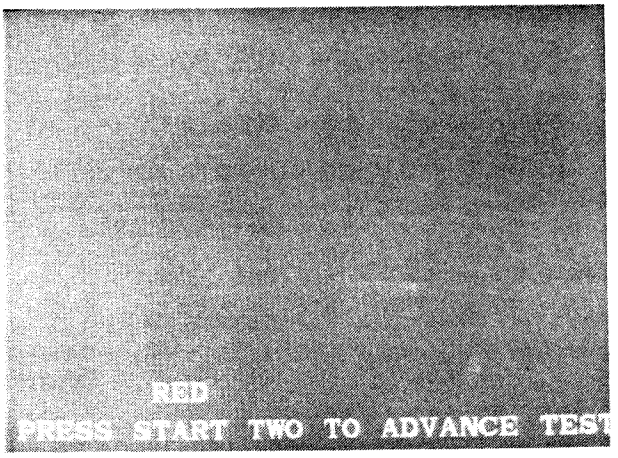

Figure 2-15 Color Purity Test

The first display to appear should be a red screen with the word *RED* displayed at the bottom of the screen as shown in Figure 2-15.

Press the player 2 start button and the next display to appear should be green with the word *GREEN* displayed at the bottom of the screen. Press the player 2 start button to obtain a blue, white, and finally a gray screen. After the gray screen, the display will repeat the white screen again.

If the display characteristics are not correct, refer to the display manual for the color-purity adjustment procedure or the possible cause of failure.

Press the player 1 start button to obtain the Convergence Test.

Convergence Test

The Convergence Test appears as shown in Figure 2-16. The grid pattern should be white. This test indicates the condition of the display size, centering, linearity, and convergence.

Press the player 2 start button, and the pattern should turn violet. Repeated pressing of the player 2 button

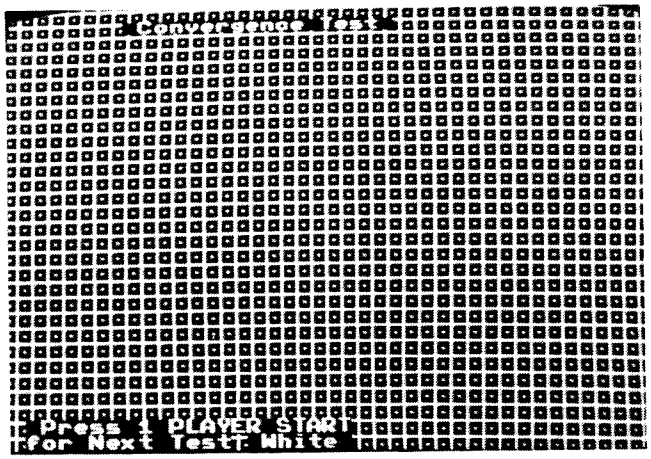

Figure 2-16 Convergence Test

should cause the screen to alternate between violet and white. Check the grid pattern for the following characteristics (the violet and white patterns are used to adjust the display convergence):

- The four corners of the frame around the grid pattern should touch all four corners of the screen.
- Grid lines should exhibit no pincushioning or barreling, and the lines should be straight within 3.0 mm.
- Violet and white pattern convergence should be within 2.0 mm.

If the display characteristics are not within these limits, refer to the display manual for the linearity and convergence adjustment procedures or to determine the possible cause of failure.

Move the joystick up, and the pattern should slowly scroll up the screen. Moving the joystick left or right should cause the pattern to scroll accordingly.

Press the player 1 start button to obtain the Sound Test.

Sound Test

The Sound Test should appear as shown in Figure 2-17. This test indicates the condition of the coin mechanisms and the music and sound-effects circuits.

The sound microprocessor is reset at the beginning of this test; the reset may take several seconds. If the sound-microprocessor reset fails, the message *SOUND PROCESSOR NOT RESPONDING* should flash near the top of the screen. Move the joystick up to sequence through the sounds. Move the joystick down to sequence backwards through the sounds. The Sound Test provides the following sound information:

- *Current Coin Value* consists of three zeros. As coins are deposited in each of the coin mechanisms, the second and third zero should change to a *1* as the coin switch is held down and change back to zero when the coin switch is released.

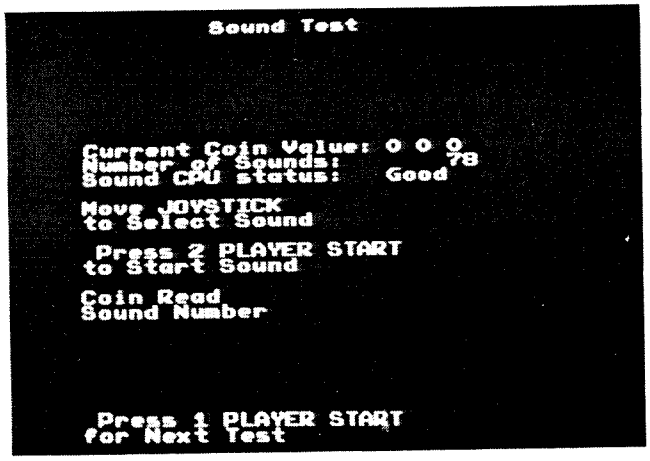

Figure 2-17 Sound Test

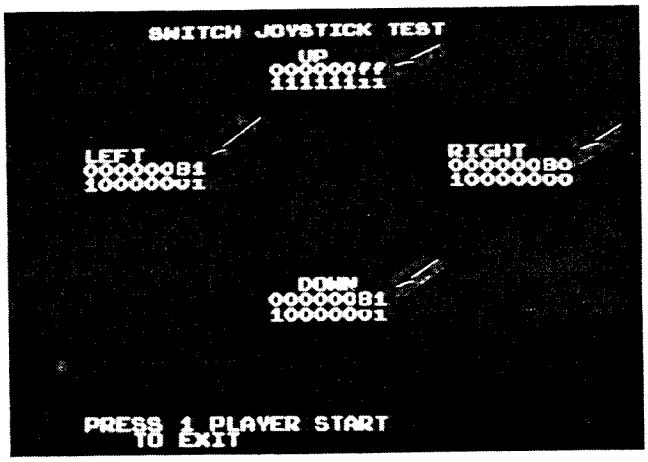

Figure 2-18 Joystick Test

- *Number of Sounds* consists of the number of sounds used in the Pack Rat game.
- *Sound CPU Status* indicates the condition of the sound microprocessor. If the sound microprocessor is good, the word *Good* should appear. If the sound microprocessor is faulty, the message *Sound CPU ROM 1* or *2* appears at the top of the screen.
- *Music Chip Test* consists of eight tones in a major scale that alternate between sound channels (16 tones in all).
- *Effects Chip Test* consists of four tones in a major chord that come from both sound channels simultaneously.

Press the player 1 start button to obtain the Joystick Test.

Joystick Test

The Joystick Test appears as shown in Figure 2-18. This test indicates the condition of the joystick switches and the analog-to-digital conversion circuits. In each group of numbers, look *only* at the right two digits in the top row. The numbers displayed should range from *6x* to *8x* when the joystick is not pushed, and should be displayed as *fx*

(hexadecimal) when the joystick is moved to its limit in any direction. (The *x* in all cases means any hexadecimal number is valid.) Figure 2-18 shows that the joystick was pushed in the upwards direction.

Press the player 1 start button to return to the Switch Test, or turn off the self-test switch to return to the Attract Mode.

Maintenance

This chapter includes preventive and corrective maintenance procedures for the PETER PACK RAT controls and for the Cartridge PCB. To assure maximum trouble-free operation of this game, we recommend that you perform preventive and corrective maintenance as described in this chapter and in the *System I™ Operators Manual*.

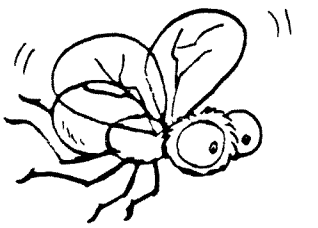

Chapter 3

Preventive Maintenance

Preventive maintenance for the PETER PACK RAT game includes inspecting and cleaning the control and switches. How often preventive maintenance is performed depends upon the game environment and frequency of play. However, we recommend that preventive maintenance be performed at least every three months.

Removing the Control Panel

Perform the following procedure to remove/replace the control panel (see Figure 3-1).

1. Unlock and open the coin door on the front of the cabinet.
2. Carefully reach through the coin door opening and release the spring-draw latch located under the control panel on the right side of the cabinet.
3. Unlock and remove the front access panel.
4. Reach through the front access panel opening and disconnect the control-panel harness from the top of the Main PCB.
5. Carefully reach up under the top of the front access-panel opening and release the spring-draw latch located under the control panel on the left side of the cabinet.

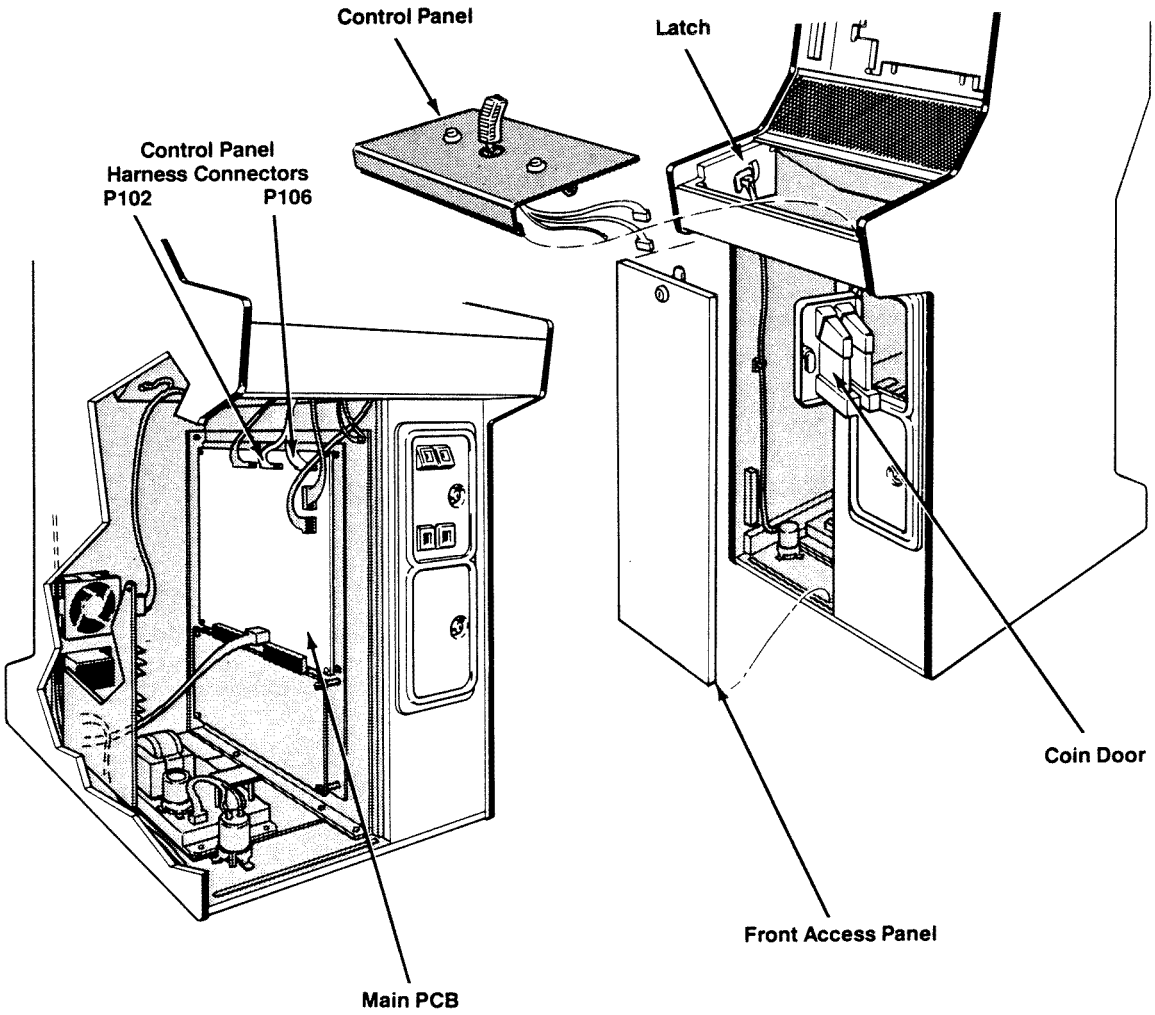

Figure 3-1 Control Panel Removal

6. From underneath, push up on the front edge of the control panel to free the panel from the slot in the cabinet.
7. Disconnect the ground wire single line connector. Remove the control panel from the cabinet.
8. Replace the control panel in the reverse order of removal.

Cleaning the Player Start Switches

Perform the following procedure to clean the switch contacts and tighten the securing hardware.

1. Remove the control panel as previously described.
2. Use electrical contact cleaner to clean the contacts. Do not burnish them. When a switch button is pressed, the wiping action of the cross-bar contacts provides a self-cleaning feature.
3. Using a 5/8-inch open-end wrench, tighten the stamped nut securing the player start switches to the control panel.

To replace the switch button, turn the stamped nut with a wrench in a counterclockwise direction, as seen from the inside of the control panel. The ring on the outside of the control panel should not spin.

Leaf Switch Repair or Replacement

To replace the leaf switch in the Joystick Assembly, you do *not* need to disassemble the joystick if the joystick is still in the control panel.

1. Disconnect the two wires from the defective switch.
2. Remove the screw in the leaf switch with a #10 Torx driver.
3. Replace the switch in reverse order of removal. Be sure to align the small extrusion on the bottom of the switch with the small hole nearest the screw casing on the bottom of the lower housing.
4. If required, adjust the switch to a narrow gap (about 1/16 inch).

Reconnect the harness wires as shown in Figure 3-2.

Joystick Control

Preventive maintenance on the joystick control consists of inspecting the shaft for excessive wear or dirt, adjusting the leaf switches, and, if necessary, replacing and tightening the securing hardware.

The joystick assembly is made of heavy-duty engineering plastics and should be lubricated with lithium grease every three months, or when you reassemble the control.

Inspect or Repair the Control Handle

Perform the following procedure to inspect or repair the control handle (see Figure 3-2). You do *not* need to disassemble the entire joystick to repair the control handle.

1. Remove the top screw in the upper part of the handle and the two locknuts in the lower part of the handle by turning the socket head screws counterclockwise using a 7/64-inch Allen wrench. Do *not* remove the screws and do not detach the handle from the shaft.
2. Gently remove the right side of the handle containing the microswitch and bezel. Leave the orange and black wires to the microswitch attached, unless you are disassembling the upper and lower housing, or replacing the microswitch.
3. Inspect the shaft for excessive wear or dirt. If the microswitch needs to be replaced or cleaned, pull the bezel and microswitch out of the case together, then slide bezel off the top of the switch (refer to Figure 3-3).
4. Reassemble the control handle in the reverse order of disassembly.

NOTE

To disassemble the upper and lower housings, refer to *Disassembling the Joystick Assembly* in the next section entitled *Corrective Maintenance*.

Corrective Maintenance

Corrective maintenance consists of removing, disassembling, reassembling, and replacing the control handle, player start switches, and leaf switches. (The Cartridge PCB replacement procedure is described in Chapter 1 of this manual.)

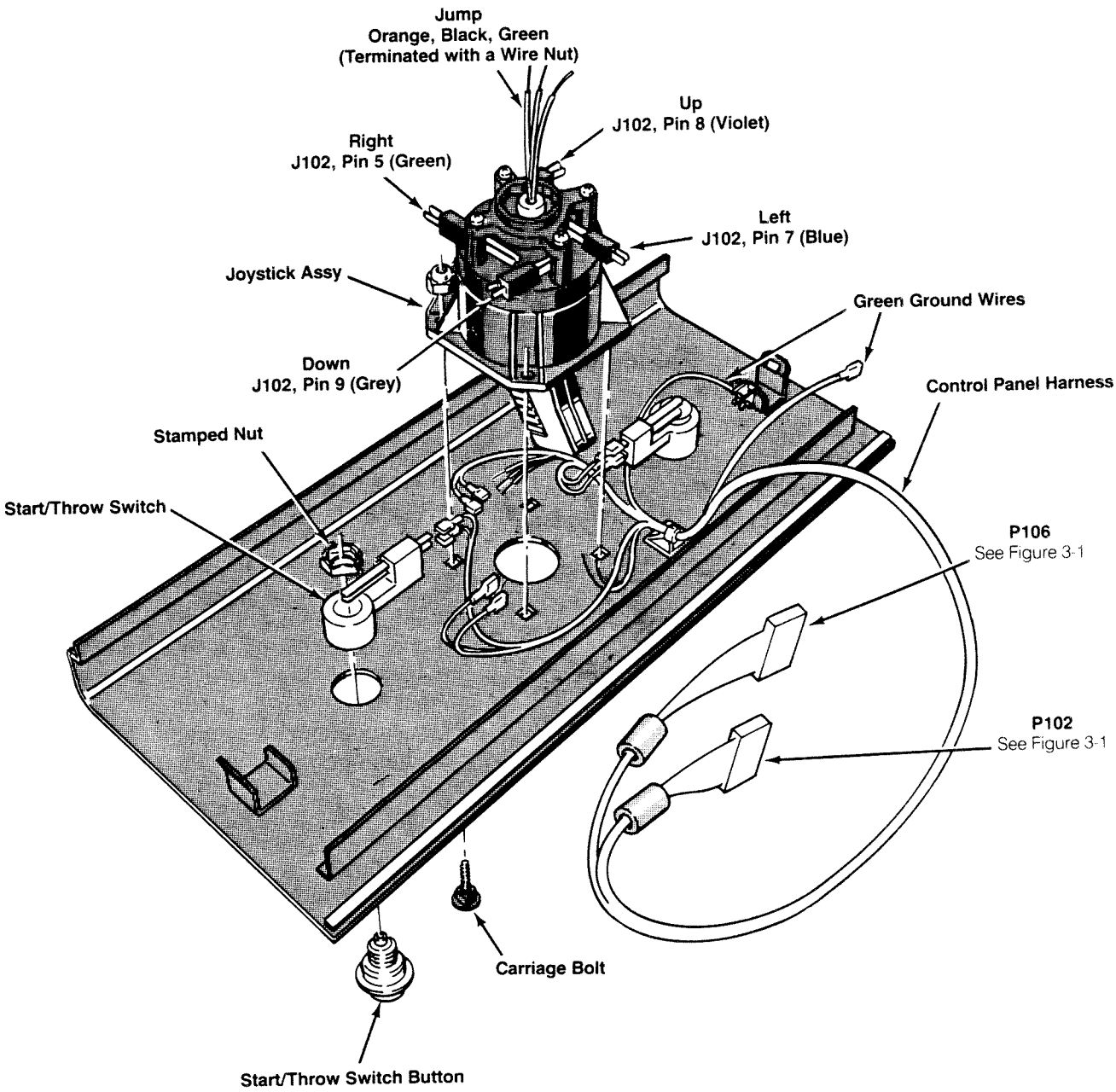

Figure 3-2 Removing the Joystick Assembly and Start Switches

Removing the Player Start Switches

Perform the following procedure to remove/replace the player start switches (see Figure 3-2).

NOTE

Player start switches can be checked for proper operation with an ohmmeter. Disconnect the wires from the switch terminals and connect an ohmmeter between the two contacts. Press and release the pushbutton and check for zero and infinite resistance.

If the switch is not operating properly, perform the following procedure.

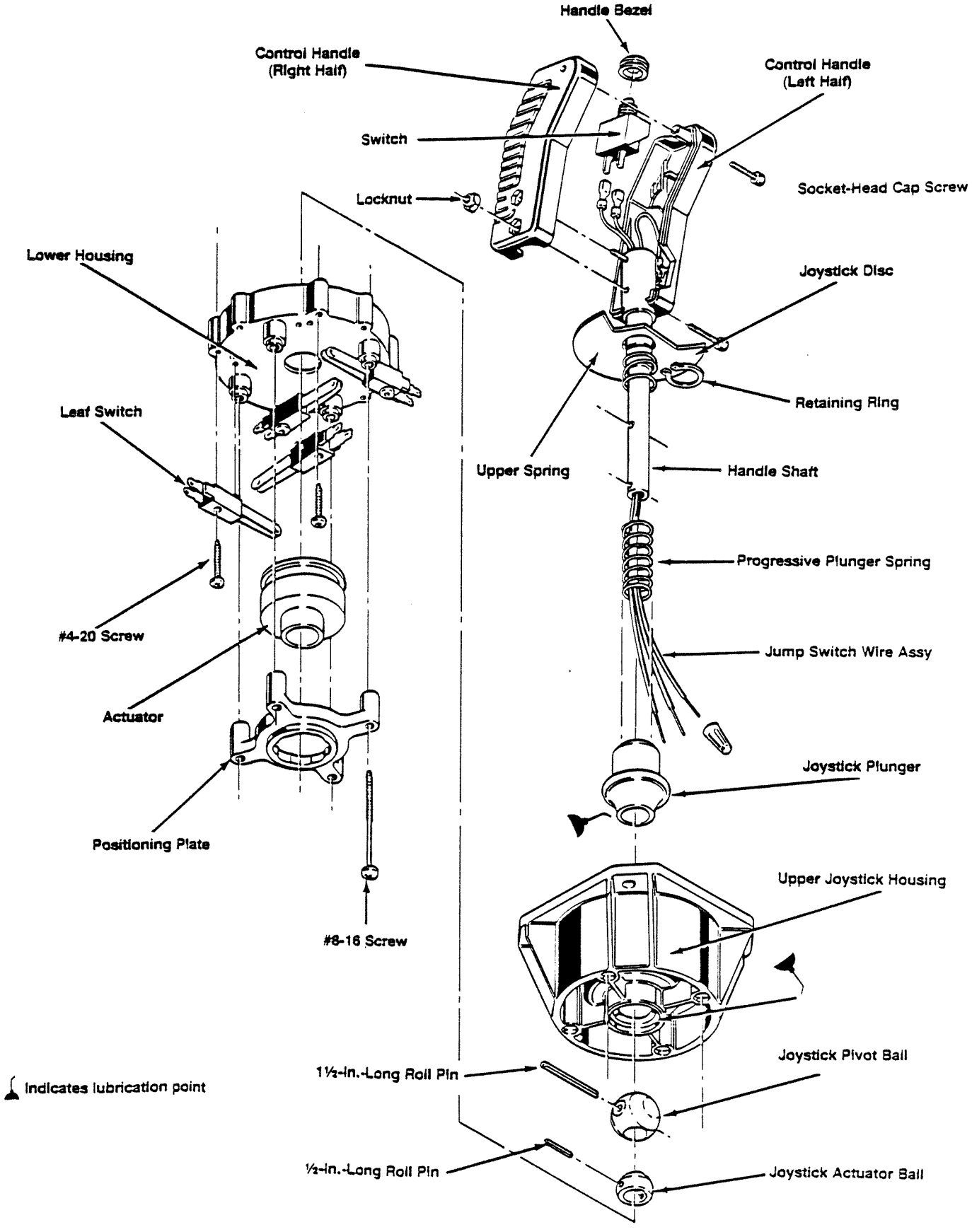

Figure 3-3 Joystick Disassembly and Lubrication

1. With the control panel open, adjust the leaf switch contacts for a narrow gap. Don't burnish the contacts. To clean them, use electrical contact cleaner.
2. To replace a leaf switch, remove the screw with a Phillips-head screwdriver.
3. To remove the switch pushbutton, turn the stamped nut with a wrench in a counterclockwise direction, as seen from the inside of the control panel. The ring on the outside of the control panel should not spin (see Figure 3-2).
4. Reinstall the pushbutton switch. Reconnect the harness wires to the switch terminals as shown in Figure 3-2.

Removing the Joystick Assembly

Perform the following procedure to remove/replace the joystick from the control panel (see Figure 3-2).

1. Remove the control panel as described under *Preventive Maintenance.*
2. Disconnect the orange, black, and green wires by removing the wire nuts.
3. Use a 3/8-inch wrench to remove the four locknuts holding the joystick assembly to the control panel.
4. Lift the joystick assembly out of the control panel.
5. Replace the joystick in the reverse order of removal.

Disassembling the Joystick Assembly

Perform the following procedure to disassemble/reassemble the joystick assembly (see Figure 3-3).

1. Remove the joystick assembly from the control panel as previously described.
2. Remove and disassemble the control handle as described previously.
3. Disconnect the wire nuts holding the green ground wire and the two wires to the microswitch. Carefully pull these three wires through the shaft.
4. Remove the four screws holding the positioning plate.
5. Remove the leaf switch actuator.
6. Remove the lower housing holding the four leaf switches.
7. Remove the actuator ball by pushing the ½-inch roll pin through the shaft. Slide the actuator ball off the end of the shaft.
8. Push the 1½-inch roll pin through the pivot ball and shaft. Be prepared for back pressure as the tension is released on the pivot ball. Slide the pivot ball off the shaft.
9. Slide the upper housing off the shaft.
10. Slide the plunger and the two springs off the shaft.
11. If you are replacing the shaft, spread the retaining ring and remove it from the shaft.
12. Slide the disc off the shaft.

NOTE

After reassembling the joystick, make sure the control handle returns freely to the center position.

Reassembling the Joystick Assembly

1. Slip the disc onto the shaft.
2. Install the retaining ring on the shaft.
3. Slide the small upper spring onto the shaft against the retaining ring. Push the larger spring onto the shaft down to the shoulder.
4. Push large end of plunger onto the shaft and over part of the larger spring (see Figure 3-3).

NOTE

Lubricate the plunger, ball, and housing at this point in the reassembly procedure.

5. Slide the upper housing onto the shaft.
6. Insert the 1½-inch roll pin partly into the pivot ball. Slide the pivot ball with the roll pin partly inserted onto the shaft. Line up the roll pin with the hole in the shaft, and push the pin through. Center the roll pin so that the amount extending is even on both sides.
6. Push the actuator ball onto the shaft.
7. Fit the extended areas of the 1½-inch roll pin into the slots in the upper housing.
8. Fit the lower housing over the shaft so that the holes align with the 1½-inch roll pin. Rotate the lower housing so that screw casings align with the holes in the upper housing.
9. Fit the positioning plate over the lower housing and actuator so that the holes align for reinserting the 1 1/16-inch screws. Do not overtighten this screw. The handle shaft must return to center freely.
10. Push the two lower screws through the left side of the blue handle.

11. Place the ground wire ring over the upper screw inside the handle. Install the handle on the shaft by slipping the two screws through the holes in the shaft.
12. Place the upper end of the shaft into the right side of the blue handle casing. Be sure to observe the "F" (indicating front) stamped into the upper housing.
13. Push the two screws through the holes in the shaft.
14. Carefully thread the ground wire and the two wires from the microswitch down through the shaft until they extend from the opposite end from the handle. Use caution to avoid pinching any of these wires.
15. Place the bezel (with the dished side down) over the microswitch, and insert both into the right side of the blue casing. Snap the handle pieces together. Replace the inset screw at the top of the handle casing; replace the hex nuts near the bottom on the opposite side.
16. Screw the leaf switches into place as previously described in *Preventive Maintenance.*
17. Reinstall the joystick assembly into the control panel.
18. Reconnect the wires to the leaf switches and the harness assembly.

Game Play

Introduction

Using an eight-position joystick, the player controls Peter Pack Rat on his quest to collect objects and bring them back to his nest. The player must return to the nest with all of the objects before the timer reaches zero. Many unfriendly creatures lurk on the path who try to prevent Peter Pack Rat from accomplishing his goal.

PETER PACK RAT is a one- or two-player game where players compete by taking turns at the controls.

Chapter 4

Attract Mode

The Attract mode begins either when the game is plugged in or after exiting the Play, High Score or Self-Test modes. The Attract mode ends when the correct amount of coins or tokens are inserted and the one- or two-player start button is pressed, or when the self-test switch is turned on. The Attract mode continuously cycles through the following events:

- Game Play Demonstration on Wave One—the Junkyard
- Audiovisual Credits Display
- High Score Table Display
- Instruction Sequence One
- Instruction Sequence Two—"Meet 'the Gang' "

Play Mode

The action begins as the player skillfully maneuvers Peter Pack Rat over the first playfield—up and down ladders and off the diving board, collecting objects as he goes. The player uses the thumb button on the joystick to jump from one platform to another, and a fire button on the control panel to throw rocks and other objects at the unfriendly creatures.

Wave One

Wave one is an easy-to-complete training level in the Junkyard. The playfield does not scroll so that players can easily see what they must accomplish. The background music during the Junkyard scene is whimsical and upbeat. The training wave has only two adversaries: the fly and Scrapper the Junkyard dog. In order to advance to the next level, Peter Pack Rat must pick up three objects (a ring and two bottles) and return them to his nest before the timer reaches zero. The wave timer is displayed as a decrementing number on the screen. As the timer approaches zero, the screen becomes darker and darker making it more and more difficult for players to distinguish objects on the screen.

In order to more quickly complete the Junkyard training wave, players can choose to ride the fly. To do this they must first throw, hit, and stun the fly with one of the rocks given at the beginning of the wave. When the fly is stunned, players can tag him and hop on board. When Peter Pack Rat is riding the fly he can maneuver almost anywhere on the screen; he does not have to stay on the paths and ladders.

Upon reaching the nest with his treasures, Peter Pack Rat dances a jig to a lively tune while the player's points are tallied. Bonus points are awarded for unused time on the wave timer and for returning all objects to the nest at one time.

Wave Two

The action resumes on level two, the Sewer wave. Here the background music is dark and ominous. The creatures the player meets in the Sewer are more threatening. Slugger the bat, Sticky the spider, Riff Rat, and the nasty Rats of Flatbush try to prevent Peter from collecting his treasures and returning them to his nest. The Sewer playfield scrolls so that the player must seek out each object.

At the bottom of the screen is a counter displaying the number of objects which remain to be collected. In the Sewer the player will find it advantageous to stun and ride Slugger the bat.

Wave Three

Level three is the Tree wave where the tempo is set by a steel band performing a lively mambo. On this scrolling playfield the player finds more new treasures to collect and unfriendly creatures to avoid. By riding Nite Owl the player can more easily complete the Tree wave.

The game play of PETER PACK RAT consists of the three backgrounds described above: the Junkyard, the Sewer, and the Tree. The first few times that the Junkyard and the Sewer backgrounds are repeated, the playfield is expanded, giving the player more variety. These backgrounds provide the player with 15 levels of unique game play as new adversaries and collectible objects appear. Big Al the alligator and Diamond Jim the snake are some of the new creatures the player will encounter in higher levels. If the player is skilled enough to complete level 15, further challenges remain as the objects in the highest three playfields are randomized and the adversaries become more aggressive.

The player can select from four skill levels: Easy, Medium, Hard, and Good Luck. To obtain higher scores and bonus lives, players should select a more difficult starting level.

PETER PACK RAT also features an add-a-coin player option. The player can opt to continue from the ending point of the previous game, thereby adding more coins to the cashbox. Using the add-a-coin feature, players can more easily learn a pattern for each level and see higher stages of the game.

High Score Mode

Upon completion of a game and if their score is among the top ten scores recorded on the game, the player(s) have 45 seconds to enter their initials in the High Score Table. The players select initials by moving the joystick and pressing a player-start button when the proper initial is displayed. Players can correct their initials by selecting the arrow that points in the desired direction and pressing a player-start button, then repeating the procedure for entering their correct initial.

Hints for Game Play

The following hints will help you get the edge over your competition:

- Pick up all objects needed and return them to the nest at the same time.
- Collect all objects and bring them back to the nest as quickly as possible for the timer bonus.
- Learn how to stun and ride the flying animals. Riding the flying animals will help you to retrieve the necessary objects and complete the wave more quickly.
- Watch for patterns of the moving obstacles and adversaries and time your movements to take advantage of them.
- Stunning the animals is worth extra points. In addition, the player is allowed to pass by the stunned animals that cannot be ridden.
- Use the slime slides to avoid other animals.

Maximizing Earnings

The key to maximum earnings is striking a midpoint on game times. Game times must be short enough that the player turnover is high. At the same time, game times must be long enough to give the player good value and insure repeat play—and repeat play is crucial to longevity. PETER PACK RAT gives the operator the flexibility to tune game difficulty and enough statistics to make intelligent adjustments.

Use the Self-Test screens showing Statistics and Histograms to evaluate game data, and the Game Options Screen to make adjustments. If collections seem low or are dropping off, observe game times on Histograms 1 through 4.

If most game times are under 90 seconds, change the difficulty option to an easier setting. If after trying an easier Game Difficulty option for a few weeks and game times are still too short, try changing the number of starting lives to 4.

If most game times on Histograms 2, 3, and 4 are over 150 seconds, first try changing the Game Difficulty to a harder setting. If after a few weeks at the harder setting the game times on Histograms 2, 3, and 4 are still mainly over 150 seconds, check the number after AUX CNTR 1 in the Statistics screen. If this number (the largest number of extra lives earned) is greater than 4, try changing the Extra Life Conditions in the Game Options Screen to a higher number. Changing the Extra Life Conditions is much more obvious to players than changing the Game Difficulty. Changing the Extra Life Conditions should only be done in extreme cases where many players have mastered the game.

After changing the Game Difficulty settings always clear or reset the Statistics by pressing the Player 2 start button in the last Statistics screen.

The Player Continuation feature (add-a-coin) is another key element to insure maximum earnings. Check to make sure that the Player Continuation feature is allowed. If this option was mistakenly changed to "Not Allowed," the number after AUX CNTR 3 in the Statistics screen will be zero.

Illustrated Parts Lists

This chapter provides information you need to order parts for your game. Common hardware (screws, nuts, washers, etc.) has been deleted from most of the parts lists. Refer to the *Atari System I™ Operators Manual*, Chapter 4, for additional parts lists that describe the parts common to all System I games.

The PCB parts lists are arranged in alphabetical order by component. Each component subsection is arranged alphanumerically by reference designator.

Other parts lists are arranged alphanumerically by Atari part number. In these parts lists, all A-prefix numbers come first. Following these are numbers in sequence evaluated up to the hyphen, namely 00- through 99-, then 000598- through approximately 201000-.

When ordering parts, please give the part number, part name, number of this manual, and serial number of your game. This will aid in filling your order rapidly and correctly. We hope the results will be less downtime and more profit from your game.

Atari Customer Service numbers are listed on the inside front cover of this manual.

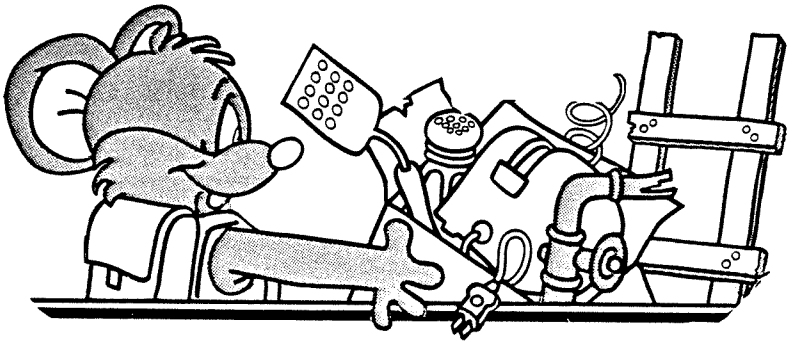

Chapter 5

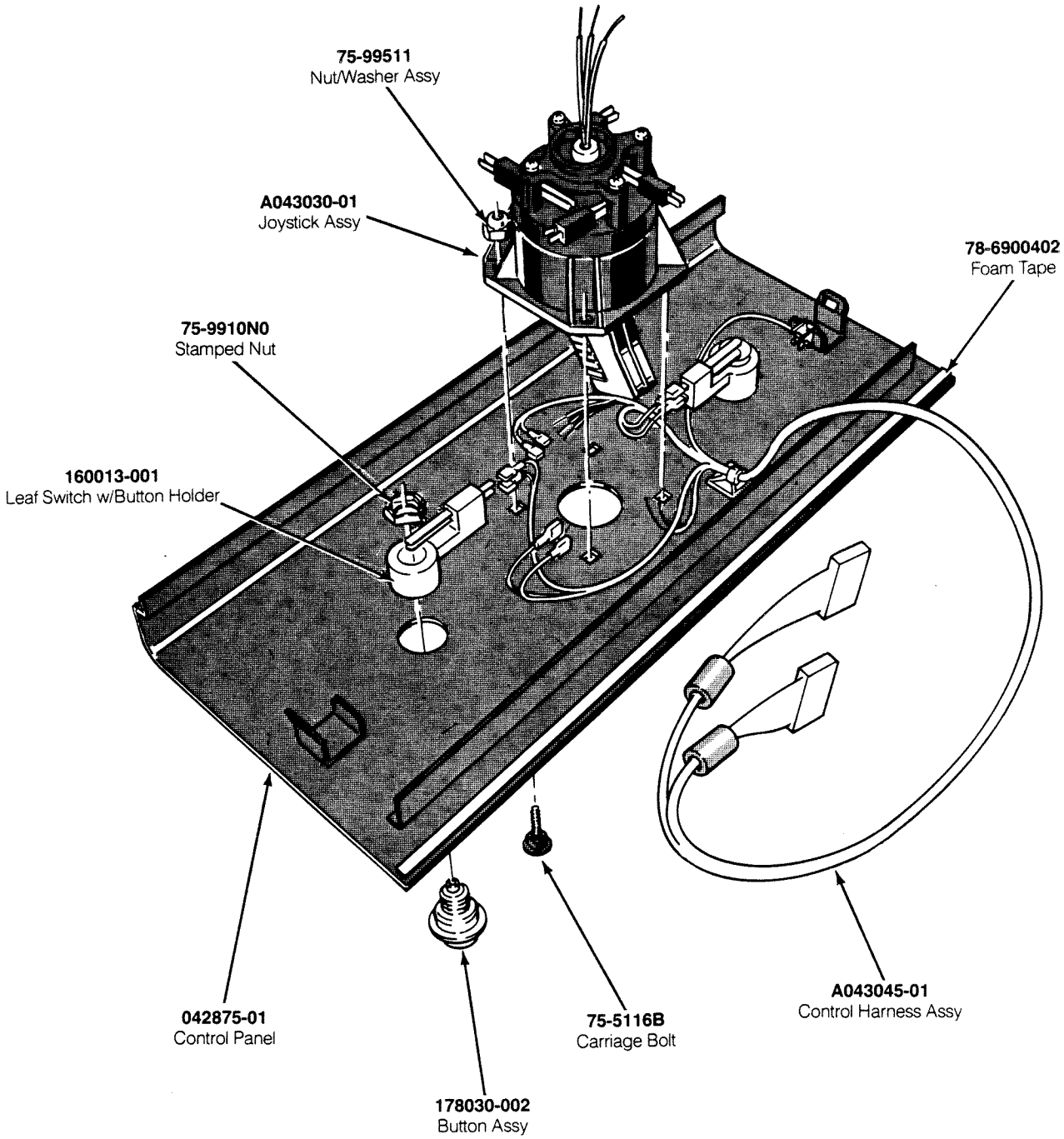

Figure 5-1 Control Panel Assembly
A042876-01

Control Panel Assembly
Parts List

Part No.	Description
A043030-01	Joystick Assembly
A043045-01	Control Harness Assembly
75-5116B	#10-24 × 1-Inch Long Black Carriage Bolt
75-9910N0	5/8-11 Stamped Nut
75-99511	#10-24 Nut/Washer Assembly
78-6900402	¾ × 1/8-Inch Thick Foam Tape (24 inches required)
79-561816P	Wire Nut
042875-01	Control Panel
042927-01	Control Panel Decal
160013-001	Leaf Switch with Button Holder
178030-002	Orange Button Assembly

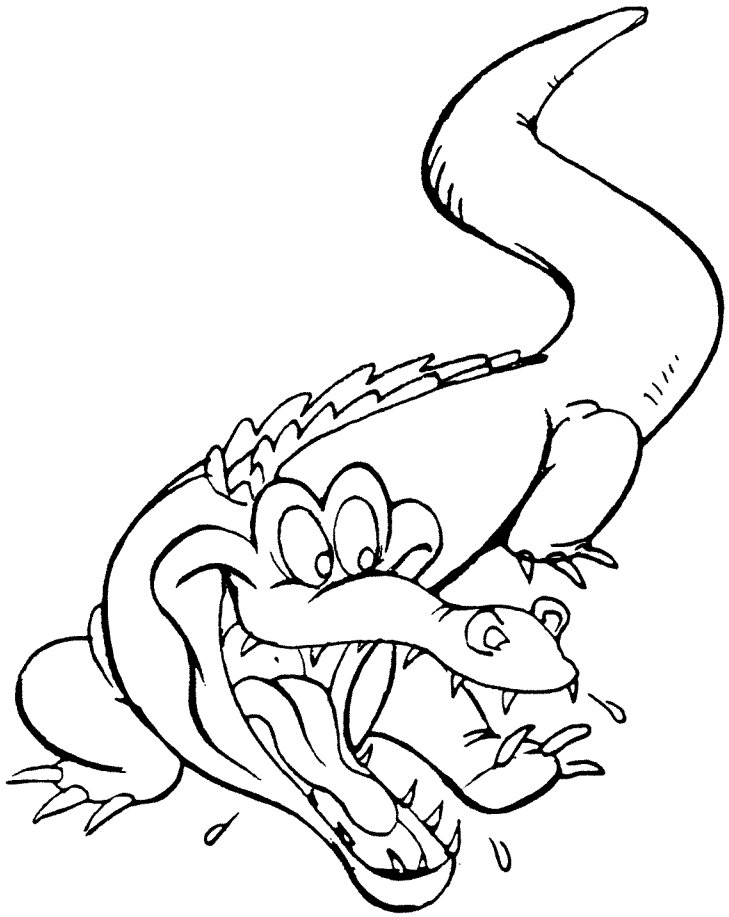

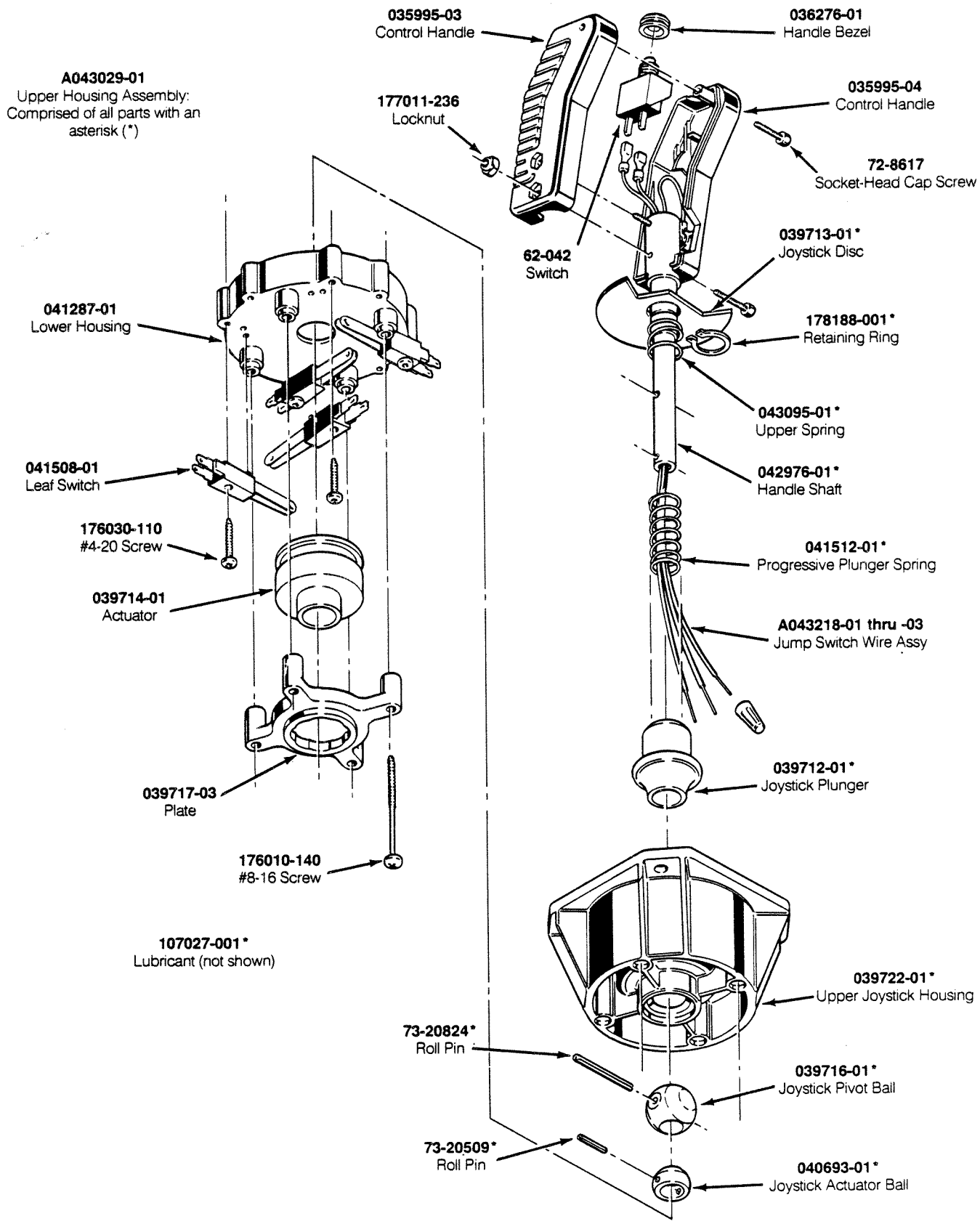

Figure 5-2 Joystick Assembly
A043030-01

Joystick Assembly
Parts List

Part No.	Description
A043029-01	Upper Housing Assembly, consisting of the following parts:
73-20509	.086-Inch-Diameter × .563-Inch-Long Roll Pin
73-20824	.125-Inch-Diameter × 1.5-Inch-Long Roll Pin
039712-01	Joystick Plunger
039713-01	Joystick Disc
039716-01	Joystick Pivot Ball
039722-01	Upper Joystick Housing
040693-01	Joystick Actuator Ball
041512-01	Progressive Plunger Spring
042976-01	Handle Shaft
043095-01	Upper Spring
107027-001	Lithium Grease Lubricant
178188-001	Retaining Ring
A043218-01	Jump Switch Wire Assembly (Orange)
A043218-02	Jump Switch Wire Assembly (Black)
A043218-03	Jump Switch Wire Assembly (Green)
62-042	Microswitch
72-8617	#6-32 × 1 1/6-Inch-Long Socket-Head Cap Screw
041287-01	Lower Housing
041508-01	Leaf Switch
035995-03	Blue Control Handle, Right Half
035995-04	Blue Control Handle, Left Half
036276-01	Handle Bezel
039714-01	Actuator
039717-03	8-Position Positioner Plate
176010-140	#8-16 × 2.50-Inch-Long Phillips Pan-Head Self-Tapping Screw
176030-110	#4-20 × .62-Inch-Long Hex Washer-Head Self-Tapping Screw
177011-236	#6-32 Thin Hex Polymer-Lock Locknut

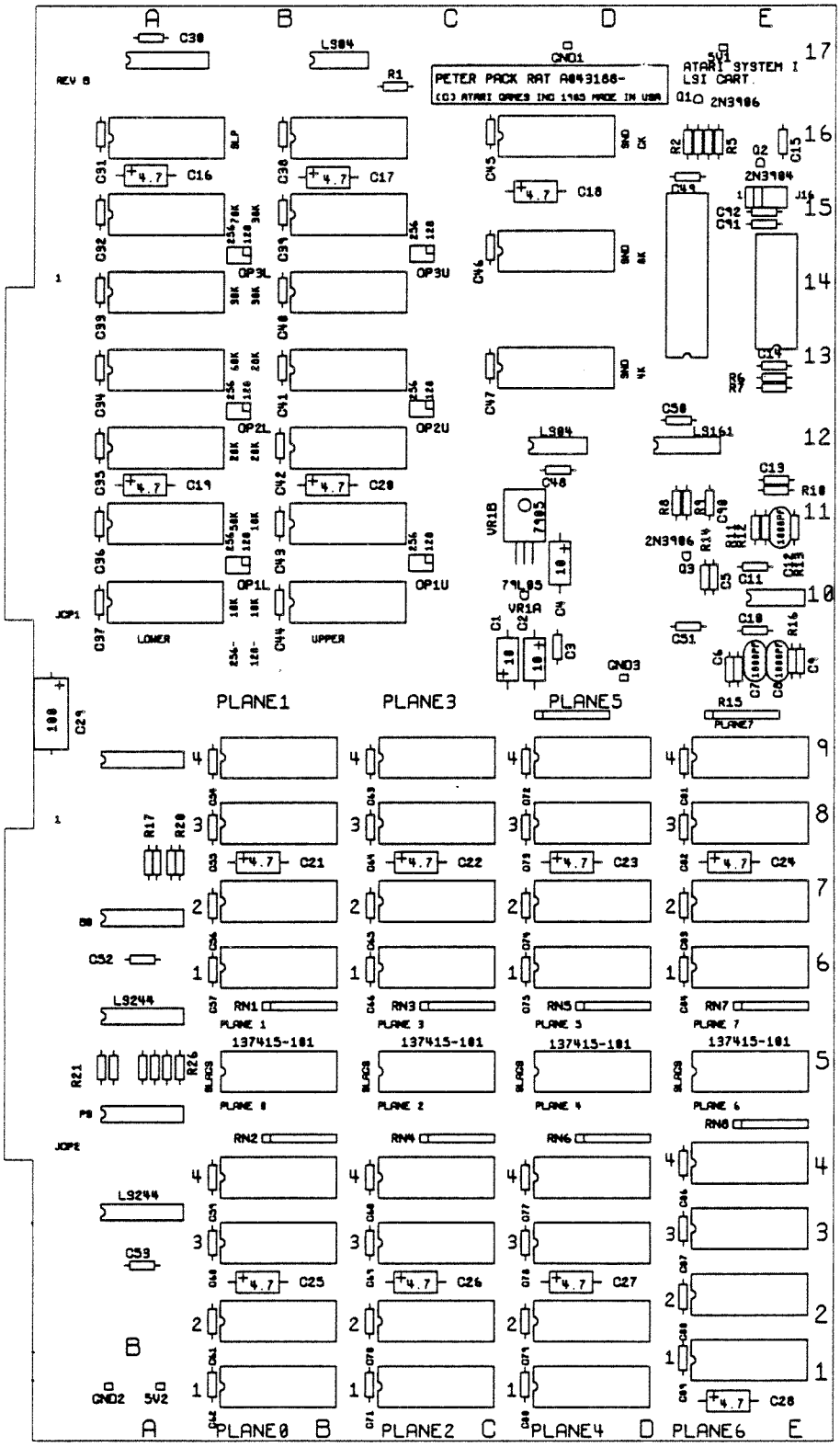

NOTICE TO ALL PERSONS RECEIVING THIS DRAWING

CONFIDENTIAL: Reproduction forbidden without the specific written permission of Atari Games Corporation, Sunnyvale, CA. This drawing is only conditionally issued, and neither receipt nor possession thereof confers or transfers any right in, or license to use, the subject matter of the drawing or any design or technical information shown thereon, nor any right to reproduce this drawing or any part thereof. Except for manufacture by vendors of Atari Games Corporation, and for manufacture under the corporation's written license, no right is granted to reproduce this drawing or the subject matter thereof, unless by written agreement with or written permission from the corporation.

2 FOR -02 AND -03 VERSIONS INSTALL OPTION JUMPERS ON OP1U-OP3U OP1L-OP3L AS SHOWN:

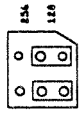

Figure 5-3 LSI Cartridge PCB Assembly A043188-03

LSI Cartridge PCB Assembly
Parts List

Designator	Description	Part No.
	Capacitors	
C1, 2	10 μF, 35 V, Electrolytic Capacitor	24-350106
C3	0.1 μF, 50 V, Ceramic Capacitor	122002-104
C4	10 μF, 35 V, Electrolytic Capacitor	24-350106
C5	0.1 μF, 50 V, Ceramic Capacitor	122002-104
C6	0.22 μF, 25 V, Ceramic Capacitor	122004-224
C7, 8	1000 pF, 100 V, Mica Capacitor	128002-102
C9	0.22 μF, 25 V, Ceramic Capacitor	122004-224
C10, 11	0.1 μF, 50 V, Ceramic Capacitor	122002-104
C12	1000 pF, 100 V, Mica Capacitor	128002-102
C13	0.22 μF, 25 V, Ceramic Capacitor	122004-224
C14, 15	0.1 μF, 50 V, Ceramic Capacitor	122002-104
C16–28	4.7 μF, 50 V, Electrolytic Capacitor	24-500475
C29	100 μF, 25 V, Electrolytic Capacitor	24-250107
C30–57, 59–66, 68–73, 75–84, 86–89	0.1 μF, 50 V, Ceramic Capacitor	122002-104
C90	100 pF, 100 V, Ceramic Capacitor	122016-101
	Integrated Circuits	
1B	Type-27256, 300 ns ROM Integrated Circuit	136028-138
1C	Type-27256, 300 ns ROM Integrated Circuit	136028-140
2B	Type-27256, 300 ns ROM Integrated Circuit	136028-150
2C	Type-27256, 300 ns ROM Integrated Circuit	136028-152
3A	Type-74LS244 Integrated Circuit	37-74LS244
3B	Type-27128, 300 ns ROM Integrated Circuit	136028-105
3C	Type-27128, 300 ns ROM Integrated Circuit	136028-111
4/5A	Type-74S473 ROM Integrated Circuit	136028-137
5B	Custom SLAGS (Storage/Logic Array Graphics Shifter) Integrated Circuit	137415-101
5C	Custom SLAGS Integrated Circuit	137415-101
5D	Custom SLAGS Integrated Circuit	137415-101
5E	Custom SLAGS Integrated Circuit	137415-101
6A	Type-74LS244 Integrated Circuit	37-74LS244
6B	Type-27256, 300 ns ROM Integrated Circuit	136028-139
6C	Type-27256, 300 ns ROM Integrated Circuit	136028-141
7A	Type-74S472 ROM Integrated Circuit	136028-136
7B	Type-27256, 300 ns ROM Integrated Circuit	136028-151
7C	Type-27256, 300 ns ROM Integrated Circuit	136028-153
8B	Type-27128, 300 ns ROM Integrated Circuit	136028-108
8C	Type-27128, 300 ns ROM Integrated Circuit	136028-114
10A	Type-27128, 200 ns ROM Integrated Circuit	136028-143
10B	Type-27128, 200 ns ROM Integrated Circuit	136028-142
11A	Type-27128, 200 ns ROM Integrated Circuit	136028-145
11B	Type-27128, 200 ns ROM Integrated Circuit	136028-144
12A	Type-27128, 200 ns ROM Integrated Circuit	136028-147
12B	Type-27128, 200 ns ROM Integrated Circuit	136028-146
12D	Type-74LS04 Integrated Circuit	37-74LS04
12D/E	Type-74LS161 Integrated Circuit	37-74LS161

LSI Cartridge PCB Assembly
Parts List, continued

Designator	Description	Part No.
14/15D	Type-27128, 300 ns ROM Integrated Circuit	136028-101
16A	Type-27128, 200 ns ROM Integrated Circuit	136028-149
16B	Type-27128, 200 ns ROM Integrated Circuit	136028-148
16D	Type-27128, 300 ns ROM Integrated Circuit	136028-102
17A	Custom SLAPSTIC Integrated Circuit	137412-107
17B	Type-74LS04 Integrated Circuit	37-74LS04
	Resistors	
R1	4.7 kΩ, ±5%, ¼ W Resistor	110000-472
R2	10 kΩ, ±5%, ¼ W Resistor	110000-103
R3	3.3 kΩ, ±5%, ¼ W Resistor	110000-332
R4	1 kΩ, ±5%, ¼ W Resistor	110000-102
R5	3.3 kΩ, ±5%, ¼ W Resistor	110000-332
R6	10 kΩ, ±5%, ¼ W Resistor	110000-103
R7	1.8 kΩ, ±5%, ¼ W Resistor	110000-182
R8	3.3 kΩ, ±5%, ¼ W Resistor	110000-332
R9	10 kΩ, ±5%, ¼ W Resistor	110000-103
R10	27 Ω, ±5%, ¼ W Resistor	110000-273
R11–13	43 Ω, ±5%, ¼ W Resistor	110000-433
R14	390 Ω, ±5%, ¼ W Resistor	110000-391
R15, 16	43 Ω, ±5%, ¼ W Resistor	110000-433
R17–20	2.4 kΩ, ±5%, ¼ W Resistor	110000-242
R21	330 Ω, ±5%, ¼ W Resistor	110000-331
R22	220 Ω, ±5%, ¼ W Resistor	110000-221
R23–26	4.7 kΩ, ±5%, ¼ W Resistor	110000-472
RN1–8	4.7 kΩ × 8 Single-Inline-Package Resistor	118002-472
	Sockets	
1B–16B	28-Contact, Medium-Insertion-Force IC Socket	79-42C28
1C–9C	28-Contact, Medium-Insertion-Force IC Socket	79-42C28
1D–9D	28-Contact, Medium-Insertion-Force IC Socket	79-42C28
1E–9E	28-Contact, Medium-Insertion-Force IC Socket	79-42C28
4/5A	20-Contact, Medium-Insertion-Force IC Socket	79-42C20
7A	20-Contact, Medium-Insertion-Force IC Socket	79-42C20
10A–16A	28-Contact, Medium-Insertion-Force IC Socket	79-42C28
10E	14-Contact, Medium-Insertion-Force IC Socket	79-42C14
13D	28-Contact, Medium-Insertion-Force IC Socket	79-42C28
14/15D	28-Contact, Medium-Insertion-Force IC Socket	79-42C28
14D/E	40-Contact, Medium-Insertion-Force IC Socket	79-42C40
14E	28-Contact, Medium-Insertion-Force IC Socket	79-42C28
16D	28-Contact, Medium-Insertion-Force IC Socket	79-42C28
17A	20-Contact, Medium-Insertion-Force IC Socket	79-42C20

LSI Cartridge PCB Assembly
Parts List, continued

Designator	Description	Part No.
	Transistors	
Q1	Type-2N3906 Transistor	33-2N3906
Q2	Type-2N3904 Transistor	34-2N3904
Q3	Type-2N3906 Transistor	33-2N3906
	Miscellaneous	
OP1L–OP3L	6-Position Header Connector	179177-006
OP1U–OP3U	6-Position Header Connector	179177-006
OP1L–OP3L	2-Position Connector Receptacle	179178-002
OP1U–OP3U	2-Position Connector Receptacle	179178-002
VR1A	Type-79L05 Voltage Regulator (Acceptable substitute is part no. 37-7905, Designator VR1B)	37-79L05
	Test Point (Acceptable substitute is part no. 020670-01)	179051-002

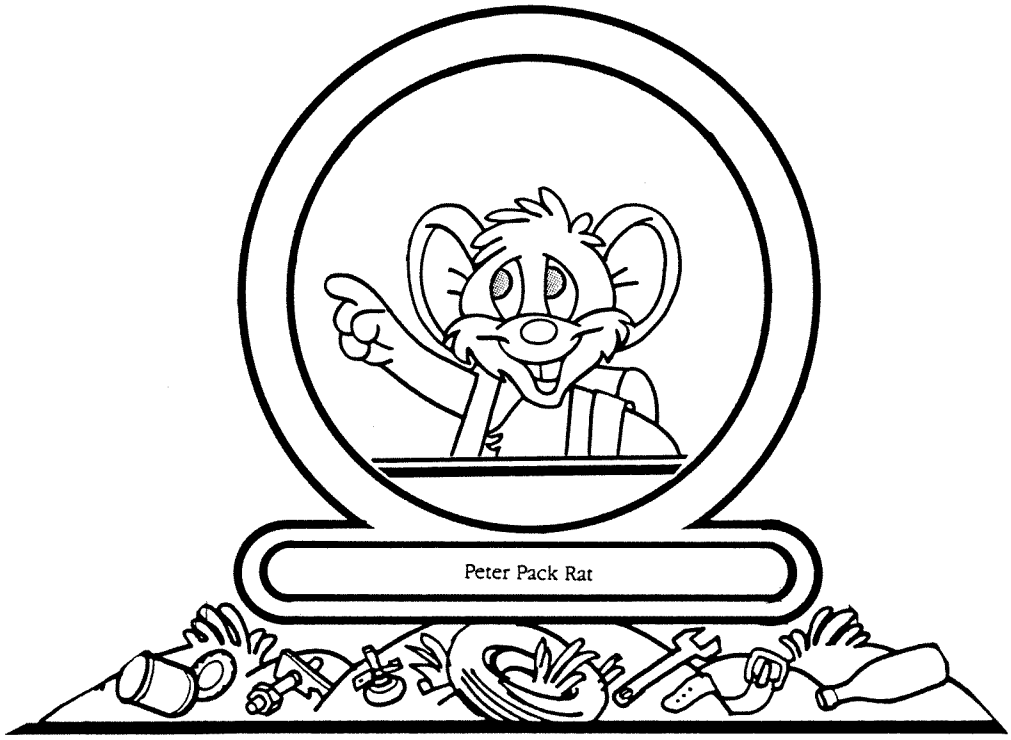

Warranty

Seller warrants that its printed-circuit boards and parts thereon are free from defects in material and workmanship under normal use and service for a period of ninety (90) days from date of shipment. Seller warrants that its video displays and LaserVideo disc players (in games supplied with displays and video-disc players) are free from defects in material and workmanship under normal use and service for a period of thirty (30) days from date of shipment. None of the Seller's other products or parts thereof are warranted.

If the products described in this manual fail to conform to this warranty, Seller's sole liability shall be, at its option, to repair, replace, or credit Buyer's account for such products which are returned to Seller during said warranty period, provided:

(a) Seller is promptly notified in writing upon discovery by Buyer that said products are defective;

(b) Such products are returned prepaid to Seller's plant; and

(c) Seller's examination of said products discloses to Seller's satisfaction that such alleged defects existed and were not caused by accident, misuse, neglect, alteration, improper repair, installation, or improper testing.

In no event shall Seller be liable for loss of profits, loss of use, incidental or consequential damages.

Except for any express warranty set forth in a written contract between Seller and Buyer which contract supersedes the terms herein, this warranty is expressed in lieu of all other warranties expressed or implied, including the implied warranties of merchantability and fitness for a particular purpose, and of all other obligations or liabilities on the Seller's part, and it neither assumes nor authorizes any other person to assume for the Seller any other liabilities in connection with the sale of products by Seller.

The use of any non-Atari parts may void your warranty, according to the terms of the warranty. The use of any non-Atari parts may also adversely affect the safety of your game and cause injury to you and others. Be very cautious in using non-Atari-supplied components with our games, in order to ensure your safety.

Atari distributors are independent, being privately owned and operated. In their judgment they may sell parts or accessories other than Atari parts or accessories. Atari Games Corporation cannot be responsible for the quality, suitability or safety of any non-Atari part or any modification including labor which is performed by such distributor.

ATARI
GAMES

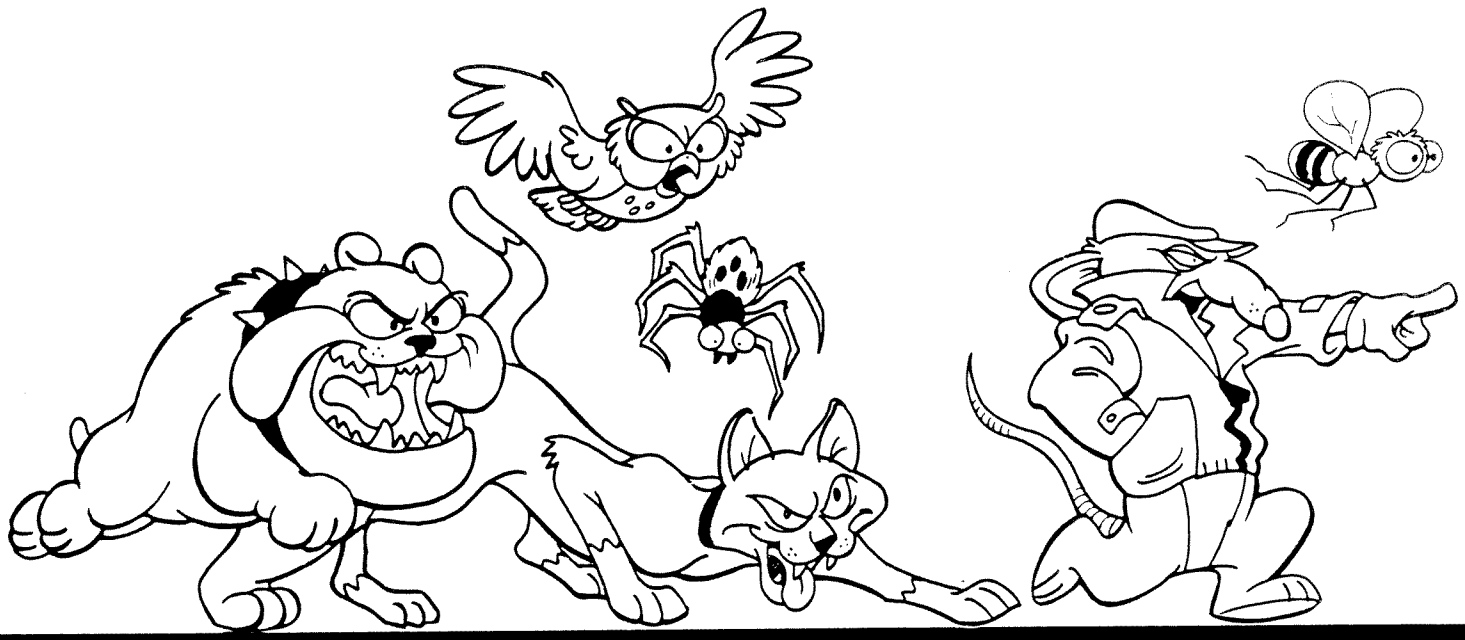

ATARI GAMES CORPORATION
1272 BORREGAS AVENUE
P.O. BOX 3618
SUNNYVALE, CALIFORNIA 94088
(408) 747-2700 • TELEX GRT 3719986