TRUSS PROJECT
ENGR 220-003
FALL-2025

PRESENTERS

- CARTER CROOM
- SEAN JOHNSON
- DIKSHANT LAMSAL

INSTRUCTOR

DR. TIMOTHY REEVES

1

DESIGN OBJECTIVES

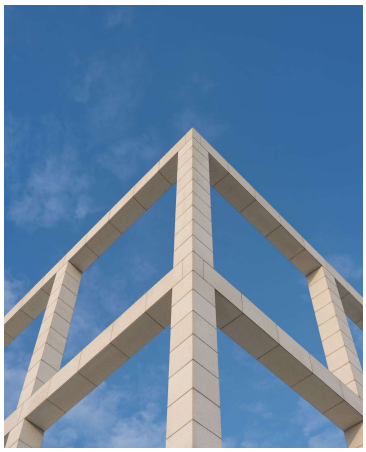

•**Main goal**: Achieve efficiency and maximize load-to-weight ratio.

•**Constraints**:

1. Truss must fit within a 23” × 23” square.
2. Span of 21” with loads applied 7” from each side.
3. All members made from masonite hardboard.

•**Optimization**: Many members shaped like I and T beams to increase strength and reduce weight.

2

MATERIAL PROPERTIES

Material: Masonite Hardboard

Key properties from Lab 2 (Bending Test):

Width: 0.955 in
Thickness: 0.17 in
Span: 3.07 in
Modulus of Elasticity (E): 1.9×10^5 psi

Source: Lab 2 – Bending Test

Experimental E was slightly lower than standard values due to material imperfections and limited linear range.

3

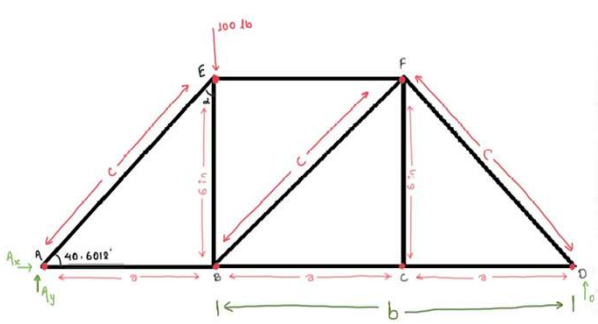

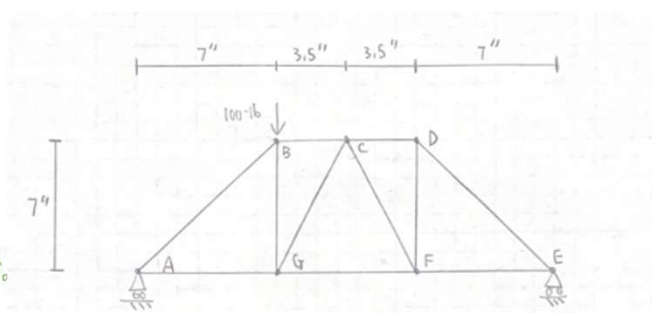

DESIGN ALTERNATIVES CONSIDERED

•Considered two additional symmetrical truss designs.

4

Rejected designs because they did not support as much weight as the final design.

Final design selected for its highest maximum theoretical load capacity.

5

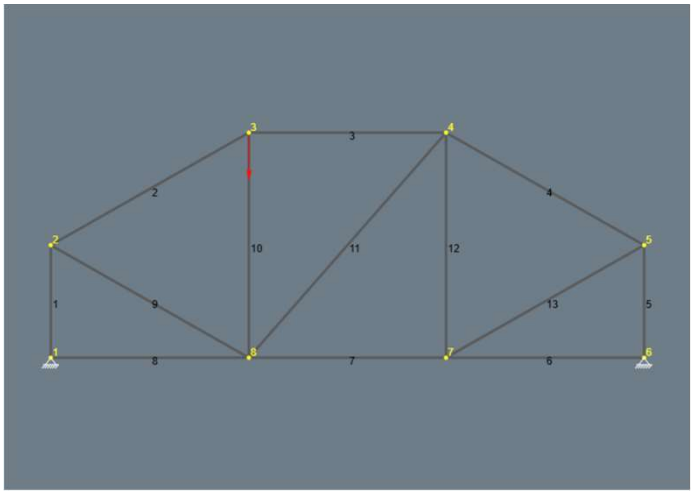

FINAL DESIGN

6

KEY DIMENSIONS

- Member 1 — 4.00 in
- Member 2 — 8.06 in
- Member 3 — 7.00 in
- Member 4 — 8.06 in
- Member 5 — 4.00 in
- Member 6 — 7.00 in
- Member 7 — 7.00 in
- Member 8 — 8.00 in
- Member 9 — 8.06 in
- Member 10 — 8.00 in
- Member 11 — 10.60 in
- Member 12 — 8.00 in
- Member 13 — 8.06 in

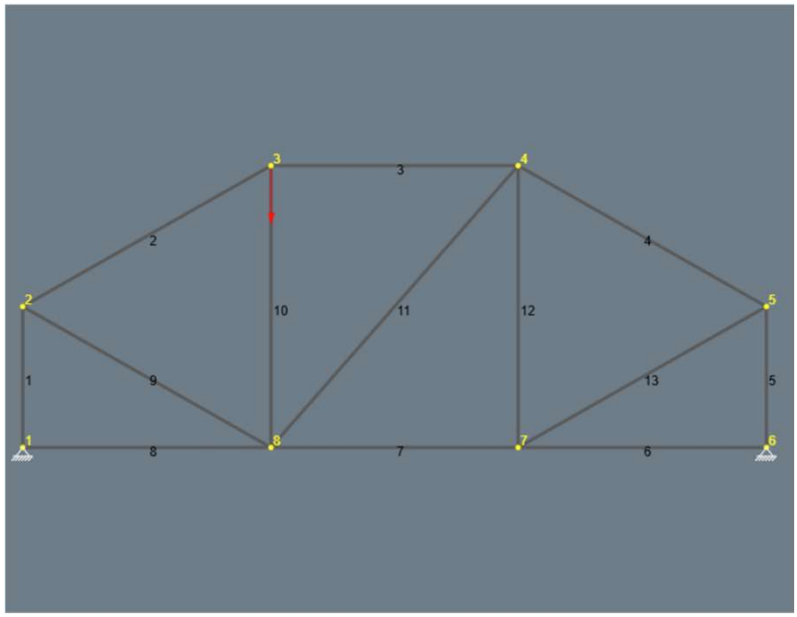

7

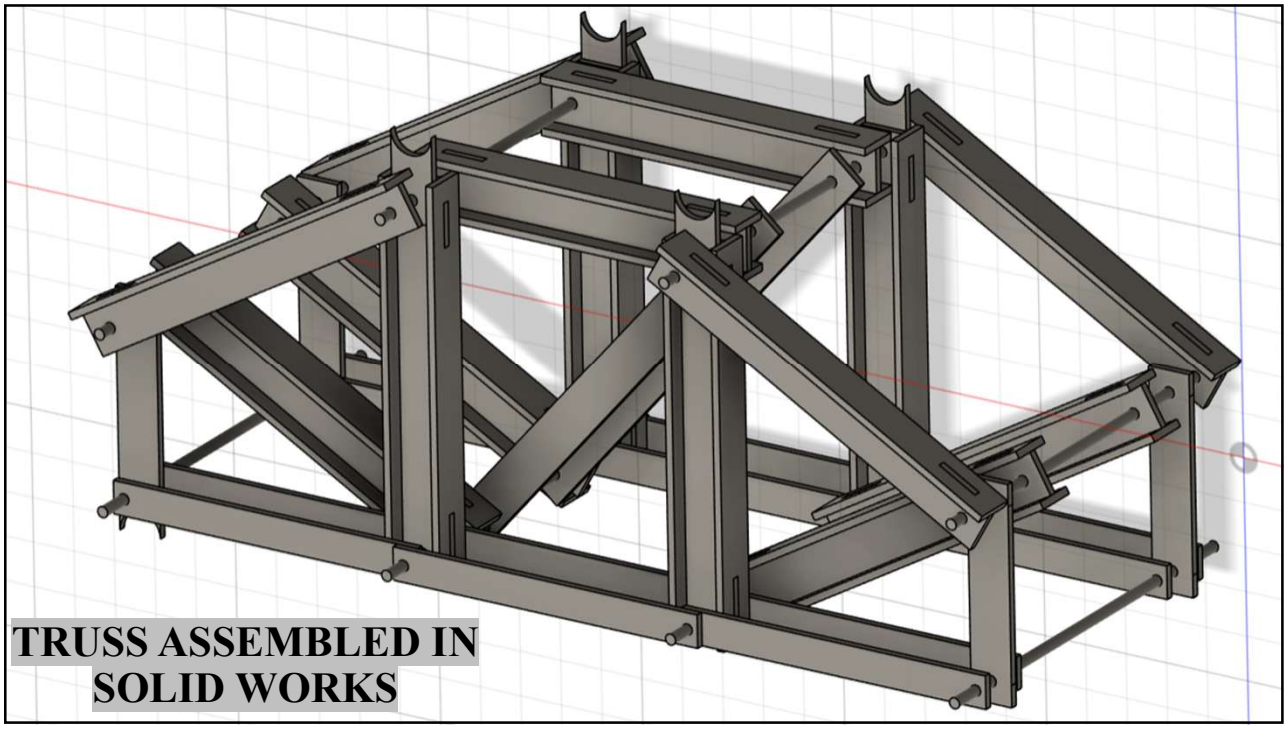

TRUSS ASSEMBLED IN SOLID WORKS

8

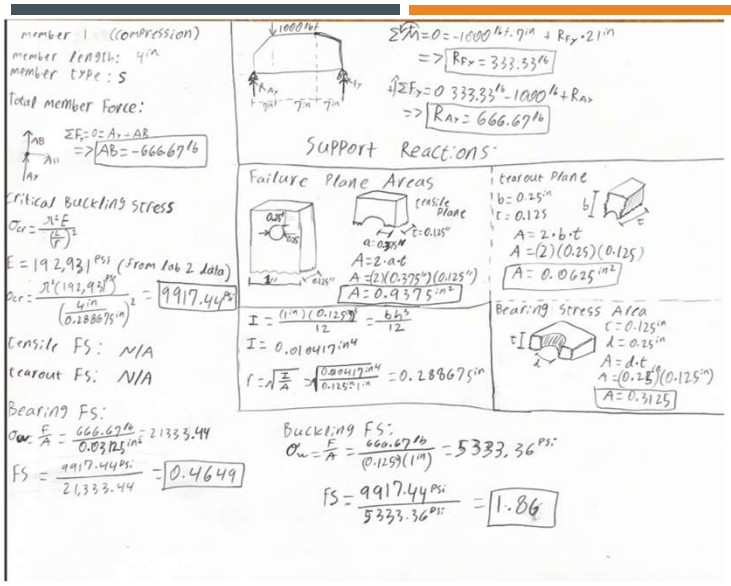

KEY CALCULATIONS

9

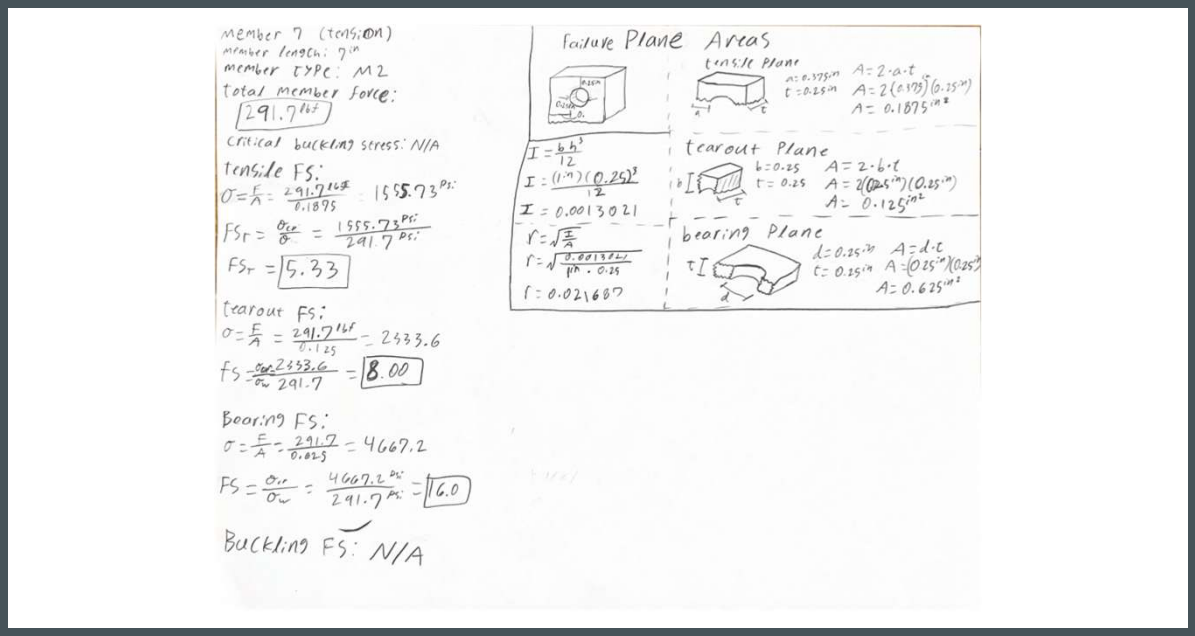

10

PREDICTED FAILURE LOAD/LOCATION

- Predicted failure load: ≈ **330 lbf**
- Expected failure location: **Member 10**
- Expected failure mechanism: **Buckling**

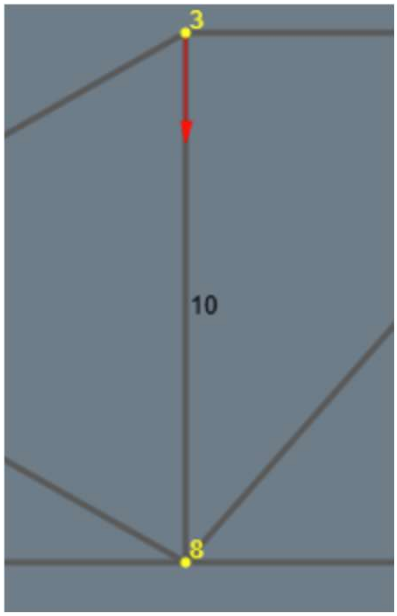

11

LEARNING

Learned that design trade-offs are sometimes necessary to meet material and size constraints.

Faced challenges fitting all members within the 23” × 23” limit, requiring design adjustments.

In a redesign, we would modify member sizes instead of cross-sectional shapes to better preserve material.

12

	Member	Member Length (in)	Type of Member (S, Mx,C)	Total Member Force (lb)	Tension or Compression or Zero (T,C)	Critical Buckling Stress (psi)	Tensile FS	Tearout FS	Bearing FS	Buckling FS
1	AB	4	S	666.7	C	9917.44	N/A	N/A	1.99	1.86
2	BC	8.06	C	671.9	C	3556.93	N/A	N/A	1.98	0.66
3	CD	7	C	583.3	C	7233.58	N/A	N/A	2.28	1.55
4	DE	8.06	C	335.9	C	3556.93	N/A	N/A	3.96	1.32
5	EF	4.00	S	333.3	C	9917.44	N/A	N/A	3.99	4.18
6	FG	7.00	M2	0	Z	N/A	N/A	N/A	N/A	N/A
7	GH	7.00	M2	291.7	T	N/A	18.23	9.113	4.56	N/A
8	AH	7.00	M2	0	Z	N/A	N/A	N/A	N/A	N/A
9	BH	8.06	C	671.9	T	N/A	415.40	1.978	59.34	N/A
10	CH	8.00	C	666.7	C	5538.21	N/A	N/A	1.99	0.33
11	DH	10.63	S	442.9	T	N/A	1.20	6.002	3.00	N/A
12	DG	8.00	C	166.7	C	5538.21	N/A	N/A	239.18	1.32
13	EG	8.06	C	335.9	T	N/A	1.19	7.913	3.96	N/A

APPENDIX

13

CONCLUSION

Our truss was designed to achieve a high load-to-weight ratio while meeting all material and size constraints. Based on our calculations, the predicted failure load is approximately **330 lbf**, with failure expected to occur in **Member 10 due to buckling**. Throughout the design process, we learned that effective truss design requires balancing efficiency with material limitations. If we were to redesign the truss, we would adjust the size of certain members rather than their cross-sectional shape to make better use of available materials.

14