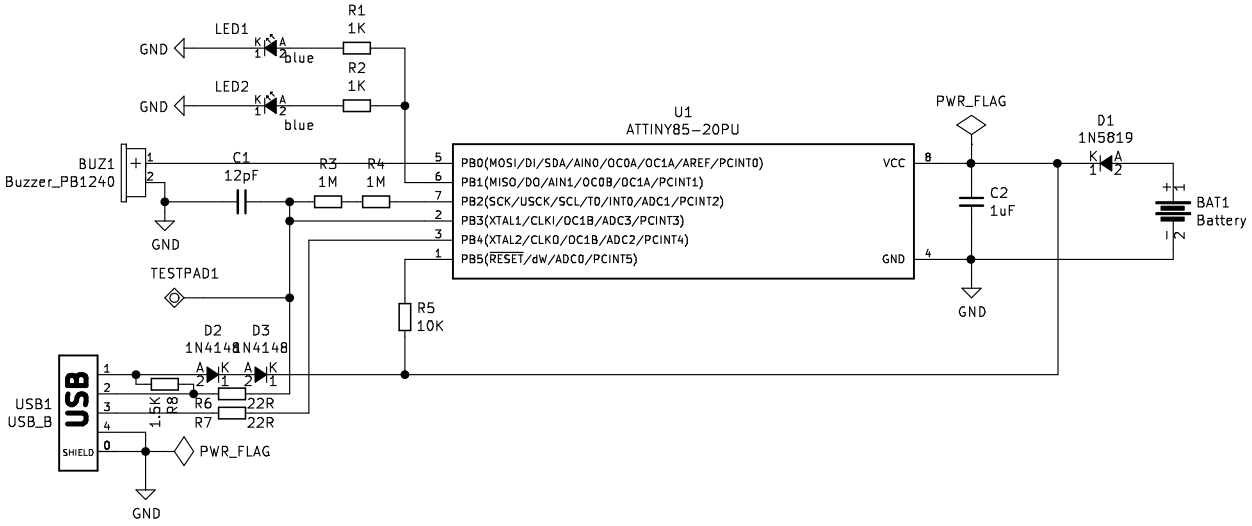

Sheet: /
File: TuxCon_Kitty_Rev_A.sch

Title:

Size: A4	Date:	**Rev:**
KiCad E.D.A. kicad (2017-04-29 revision a92ea8c75)-master		Id: 1/1