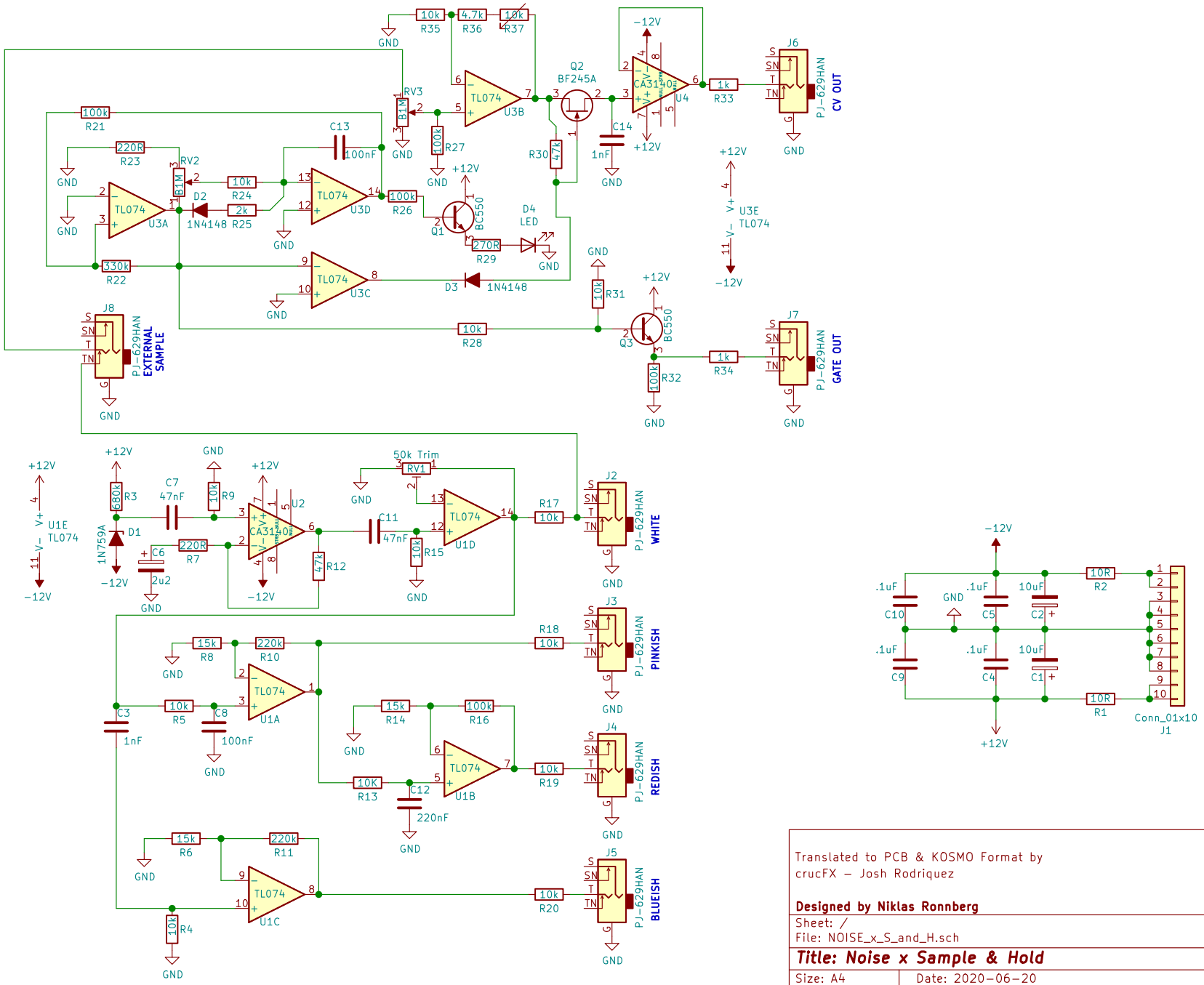

Translated to PCB & KOSMO Format by
crucFX – Josh Rodriquez

Designed by Niklas Ronnberg

Sheet: /
File: NOISE_x_S_and_H.sch

Title: Noise x Sample & Hold

Size: A4	Date: 2020-06-20	Rev:
KiCad E.D.A. kicad (5.1.6)-1		Id: 1/1